SX8R Bus Coupler Module

Reliable Remote I/O System with Various I/O Modules for Versatile Applications

Class I Div 2 Hazardous Location

• See our website for details on approvals and standards.

SX8R bus coupler module

Quantity: 1

Terminal	Power	Communication protocol		Part No.
		Ethernet port 1	Ethernet port 2	
Push-in	24V DC	Modbus TCP communication (server) EtherNet/IP communication (adapter) CC-Link IE field basic slave communication (slave station) Maintenance communication (server)	Maintenance communication (server)	SX8R-ECB4
Screw				SX8R-ECB1

Configuration tool

Name	Description	Operating environment
SX8R Configurator	PC configuration tool to program communication and module settings, and monitor the status of each module.	Windows10 or Windows11

Operating environment

Operating temperature		-25 to +65°C (no freezing)
Storage temperature		-25 to +70°C (no freezing)
Operating humidity		10 to 95% (no condensation)
Storage humidity		10 to 95% (no condensation)
Pollution degree		2 (IEC 60664-1)
Degree of protection		IP20 (IEC 60529)
Corrosion immunity		Free from corrosive gas
Altitude or atmospheric pressure		In operation: 1,013 to 795hPa (0 to 2,000m) In transport: 1,013 to 701hPa (0 to 3,000m)
Installation location		Inside cabinet
Device class		Open type apparatus
Vibration resistance	DIN rail mount	5 to 8.4Hz / half amplitude 3.5mm, 8.4 to 150Hz / acceleration 9.8m/s^2 (1G) 2 hours each on three mutually perpendicular axes (IEC/EN61131-2)
	Panel mount	
Shock resistance		147m/s^2(15G)11ms 3 shocks each on three mutually perpendicular axes (IEC 61131-2)
EMC resistance		Compatible with IEC/EN 61131-2 zone B

Communication port specifications

Communication type		IEEE802.3 compliant 10BASE-T, 100BASE-TX (Auto MDI/MDI-X supported)
Communication protocol	Ethernet port 1	Compatible with: EtherNet/IP communication (adapter), Modbus TCP communication (server), CC-Link IE Field Basic communication (slave station), and maintenance communication (server)
	Ethernet port 2	Maintenance communication (server) supported
EtherNet/IP communication specifications		I/O message communication function RPI (communication cycle): 2ms to10s (in 1ms increments)
Connector		RJ45
Cable		STP, CAT 5 or higher
Maximum cable length		100 m
Isolation between internal circuit		Pulse transformer isolation

Electrical specifications

Part No.		SX8R-ECB1	SX8R-ECB4
Rated power voltage		External power supply: 24V DC	
Allowable voltage range		20.4 to 28.8V DC (including ripple)	
Current draw	Internal power supply	–	
	External power supply	When connected with max. load: 0.85A (24V DC)	
Allowable momentary power interruption		10ms maximum (at the rated power voltage)	
Isolation between internal circuit		Not isolated	
Dielectric strength		Power supply terminal - FE: 500V AC, 1 minute	
Insulation resistance		Power supply terminal - FE:10MΩ min. (500V DC megger)	
Inrush current		35A maximum	
Grounding		Class D grounding (class 3 grounding)	
Grounding wire		UL 1007 AWG16	
Power supply wire		UL 1007 AWG24 to16, UL 2464 AWG24 to 16, UL 1015 AWG20 to 16	
Power supply connector insertion/removal durability		100 times minimum	
Effect of improper power supply connection		Reverse polarity: No operation, no damage Improper voltage: Permanent damage may occur Improper wiring connection: Permanent damage may occur	
Weight		Approx. 165g	

Dimensions

All dimensions in mm.

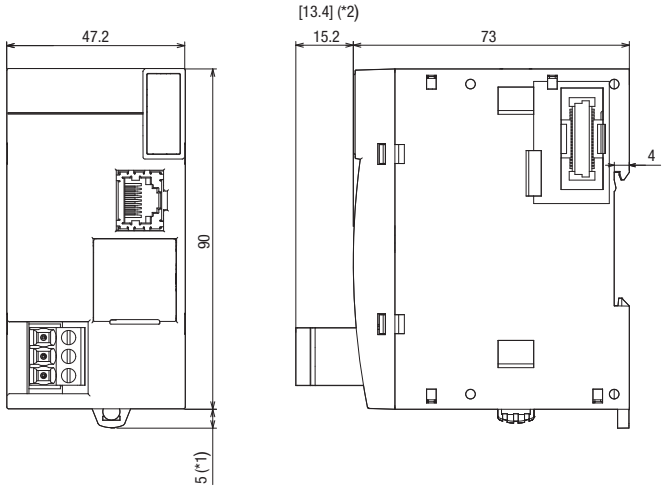

*1) When the hook is pulled out: 9.3mm.
*2) Screw terminal type. Dimension in [ ] is for the push-in terminal type.

System configuration

- A maximum of seven I/O modules can be connected on the right side (between CPU module and expansion interface module) of the SX8R. When using an expansion interface module, additional eight I/O modules can be connected on the right side (beyond the expansion interface module) of the expansion interface module. Slot numbers (1 - 15) are allocated in order of connection, from the I/O modules connected to the SX8R.

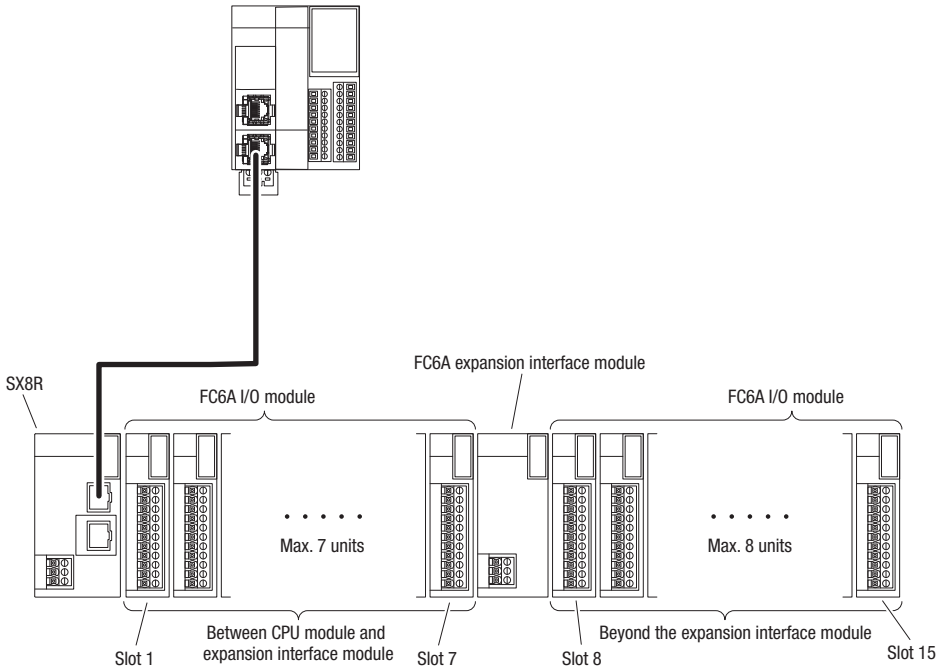

FC6A I/O Modules

Maximum of 15 of the following IDEC FC6A I/O modules can be connected to the SX8R Bus coupler module.

Digital I/O module

Digital input module

Quantity: 1

Type	Terminal specifications	Part No.
8 point DC input	Detachable 5.08mm pitch 11-pin, screw connector	FC6A–N08B1
	Detachable 5.08mm pitch 11-pin, push-in connector	FC6A–N08B4
16 point DC input	Detachable 3.81mm pitch 10-pin, screw connector	FC6A–N16B1
	Detachable 3.81mm pitch 10-pin, push-in connector	FC6A–N16B4
16 point DC input	20-pin MIL connector	FC6A–N16B3
32 point DC input		FC6A–N32B3
8 point AC input	Detachable 5.08mm pitch 11-pin, screw connector	FC6A–N08A11
	Detachable 5.08mm pitch 11-pin, push-in connector	FC6A–N08A14

Digital output module

Quantity: 1

Type	Terminal specifications	Part No.
8 point relay output	Detachable 5.08mm pitch 11-pin, screw connector	FC6A–R081
	Detachable 5.08mm pitch 11-pin, push-in connector	FC6A–R084
16 point relay output	Detachable 3.81mm pitch 10-pin, screw connector	FC6A–R161
	Detachable 3.81mm pitch 10-pin, push-in connector	FC6A–R164
8 point transistor sink output	Detachable 5.08mm pitch 11-pin, screw connector	FC6A–T08K1
	Detachable 5.08mm pitch 11-pin, push-in connector	FC6A–T08K4
8 point transistor source output	Detachable 5.08mm pitch 11-pin, screw connector	FC6A–T08P1
	Detachable 5.08mm pitch 11-pin, push-in connector	FC6A–T08P4
16 point transistor sink output	Detachable 3.81mm pitch 10-pin, screw connector	FC6A–T16K1
	20-pin MIL connector	FC6A–T16K3
	Detachable 3.81mm pitch 10-pin, push-in connector	FC6A–T16K4
16 point transistor source output	Detachable 3.81mm pitch 10-pin, screw connector	FC6A–T16P1
	20-pin MIL connector	FC6A–T16P3
	Detachable 3.81mm pitch 10-pin, push-in connector	FC6A–T16P4
32 point transistor sink output	20-pin MIL connector	FC6A–T32K3
32 point transistor source output	20-pin MIL connector	FC6A–T32P3

Digital mixed I/O modules

Quantity: 1

Type	Input	Output	Terminal specifications	Part No.
8 point mixed I/O	4 point DC input sink/source	4 point relay output 240V AC, 2A 30V DC, 2A	Detachable 5.08mm pitch 11-pin, screw connector	FC6A–M08BR1
			Detachable 5.08mm pitch 11-pin, push-in connector	FC6A–M08BR4
24 point mixed I/O	16 point DC input sink/source	8 point relay output 240V AC, 2A 30V DC, 2A	Detachable 3.81mm pitch 17-pin, screw connector Detachable 3.81mm pitch 11-pin, screw connector	FC6A–M24BR1
			Detachable 3.81mm pitch 17-pin, push-in connector Detachable 3.81mm pitch 11-pin, push-in connector	FC6A–M24BR4

FC6A I/O Modules

Analog I/O module

Analog input module

Quantity: 1

Input type	Output type	I/O points	Terminal specifications	Part No.
Voltage input (0 to 10V, -10 to +10V) Current input (0 to 20mA, 4 to 20mA)	–	2 point analog input	Detachable 5.08mm pitch 11-pin, screw connector	FC6A–J2C1
			Detachable 5.08mm pitch 11-pin, push-in connector	FC6A–J2C4
	–	4 point analog input	Detachable 3.81mm pitch 10-pin, screw connector	FC6A–J4A1
			Detachable 3.81mm pitch 10-pin, push-in connector	FC6A–J4A4
	–	8 point analog input	Detachable 3.81mm pitch 10-pin, screw connector	FC6A–J8A1
			Detachable 3.81mm pitch 10-pin, push-in connector	FC6A–J8A4
Voltage input (0 to 10V, -10 to +10V) Current input (0 to 20mA, 4 to 20mA) Thermocouple (K, J, R, S, B, E, T, N, C) RTDs (Ni100, Ni1000, PT100, PT1000)	–	4 point analog input	Detachable 3.81mm pitch 10-pin, screw connector	FC6A–J4CN1
			Detachable 3.81mm pitch 10-pin, push-in connector	FC6A–J4CN4
Thermocouple (K, J, R, S, B, E, T, N, C)	–	Insulation type between channels 4 point analog input	Detachable 3.81mm pitch 10-pin, screw connector	FC6A–J4CH1Y
			Detachable 3.81mm pitch 10-pin, push-in connector	FC6A–J4CH4Y
Thermocouple (K, J, R, S, B, E, T, N, C) NTC/PTC thermistor input	–	8 point analog input	Detachable 3.81mm pitch 10-pin, screw connector	FC6A-J8CU1
			Detachable 3.81mm pitch 10-pin, push-in connector	FC6A-J8CU4

Analog output module

Quantity: 1

Input type	Output type	I/O points	Terminal specifications	Part No.
–	Voltage output (0 to 10V, -10 to +10V) Current output (0 to 20mA, 4 to 20mA)	2 point analog output	Detachable 5.08mm pitch 11-pin, screw connector	FC6A–K2A1
			Detachable 5.08mm pitch 11-pin, push-in connector	FC6A–K2A4
		4 point analog output	Detachable 5.08mm pitch 11-pin, screw connector	FC6A–K4A1
			Detachable 5.08mm pitch 11-pin, push-in connector	FC6A–K4A4

Analog mixed I/O modules

Quantity: 1

Input type	Output type	I/O points	Terminal specifications	Part No.
Voltage input (0 to 10V, -10 to +10V) Current input (0 to 20mA, 4 to 20mA)	Voltage output (0 to 10V, -10 to +10V) Current output (0 to 20mA, 4 to 20mA)	4 point analog input/ 2 point analog output	Detachable 3.81mm pitch 10-pin, screw connector	FC6A–L06A1
			Detachable 3.81mm pitch 10-pin, push-in connector	FC6A–L06A4
Voltage input (0 to 10V, -10 to +10V) Current input (0 to 20mA, 4 to 20mA) Thermocouple (K, J, R, S, B, E, T, N, C) RTDs (Ni100, Ni1000, PT100, PT1000)		2 point analog input/ 1 point analog output	Detachable 5.08mm pitch 11-pin, screw connector	FC6A–L03CN1
			Detachable 5.08mm pitch 11-pin, push-in connector	FC6A–L03CN4

FC6A Expansion Interface Modules

Quantity: 1

Type	Terminal specifications	Part No.
Expansion interface module	Detachable 5.08mm pitch, screw connector	FC6A–EXM2
	Detachable 5.08mm pitch, push-in connector	FC6A–EXM24

Accessories

Name		Specification		Part No.
Terminal block connector for expansion module (qty: 2)		5.08mm pitch 11-pin, screw terminal		FC6A–PMTB11PN02
		5.08mm pitch 11-pin, push-in terminal		FC6A–PMSB11PN02
		3.81mm pitch 10-pin, screw terminal		FC6A–PMTC10PN02
		3.81mm pitch 11-pin, screw terminal		FC6A–PMTC11PN02
		3.81mm pitch 17-pin, screw terminal		FC6A–PMTC17PN02
		3.81mm pitch 10-pin, push-in terminal		FC6A–PMSC10PN02
		3.81mm pitch 11-pin, push-in terminal		FC6A–PMSC11PN02
		3.81mm pitch 17-pin, push-in terminal		FC6A–PMSC17PN02
Power terminal block connector for SX8R and FC6A-EXM2 expansion interface module (qty: 2)		5.08mm pitch 3-pin, screw terminal		FC6A–PMTB03PN02
		5.08mm pitch 3-pin, push-in terminal		FC6A–PMSB03PN02
Direct mounting hook for FC6A expansion module (qty: 5)		Also compatible with FC6A expansion Interface modules		FC6A–PSP2PN05
35mm wide DIN rail (qty: 10)		Aluminum, 1m		BAA1000PN10
End clip (qty: 10)		–		BNL6PN10
I/O terminal cable	20-pole	Shielded Wire: UL758 style 20276 compliant MIL connector plastic: UL94-V0 compliant	0.5 m	FC9Z–H050A20
			1 m	FC9Z–H100A20
			2 m	FC9Z–H200A20
			3 m	FC9Z–H300A20
		Not shielded Wire: UL758 style 2651 compliant MIL connector plastic: UL94-V0 compliant	0.5 m	FC9Z–H050B20
			1 m	FC9Z–H100B20
			2 m	FC9Z–H200B20
			3 m	FC9Z–H300B20

Recommended Ferrules

Item	Wire size (stranded wire) AWG	Wire size (stranded wire) mm²	Color	Part No.	Wire strip length	Quantity
Recommended ferrule With insulation cover Standard package 	24	0.25	Light blue	S3TL-H025-12WJ	10 to 11 mm	500
	22	0.34	Turquoise	S3TL-H034-12WT	10 to 11 mm	
	20	0.50	Orange	S3TL-H05-14WA	10 to 11 mm	
	18	0.75	White	S3TL-H075-14WW	10 to 11 mm	
	18	1.00	Yellow	S3TL-H10-14WY	10 to 11 mm	
	16	1.50	Gray	S3TL-H40-20DC	10 to 11 mm	

- Other insulation cover colors available. For details, see catalog EP1747.
- Recommended ferrules differ for each equipment. For details, see the user's manual.

Tools

Name / Shape	Part No.	Quantity	Remarks
Auto-adjust stripping tool 	S3TL-ST06	1	PVC-insulated thin stranded and solid wires 0.08 to 6mm² (28AWG to 10AWG)
Crimping tool (for ferrules) 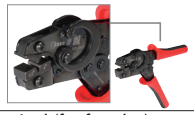	S3TL-CR04T	1	Crimping range 0.5 to 4mm² /30AWG to 12AWG 
Crimping tool (for ferrules) 	S3TL-CR06D	1	Crimping range 0.25 to 6mm² /24AWG to 10AWG 
Insulated screwdriver 	S3TL-D04-25-75	1	Blade size (unit: mm), for 3.81mm pitch terminal block connectors 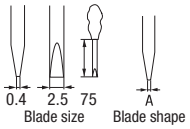
	S3TL-D06-35-100	1	Blade size (unit: mm), for 5.08mm pitch terminal block connectors 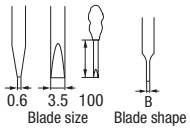

Operating Environment (FC6A I/O Modules and FC6A Expansion Interface Modules)

Operating temperature		-10 to +55°C (no freezing)
Expanded operating temperature		-25 to -10°C, +55 to +65°C (*1) (no freezing)
Storage temperature		-25 to +70°C (no freezing)
Operating humidity		10 to 95% (no condensation)
Storage humidity		10 to 95% (no condensation)
Pollution degree		2 (IEC 60664-1)
Degree of protection		IP20 (IEC 60529)
Corrosion immunity		Free from corrosive gas
Altitude or atmospheric pressure		During operation: 1,013 to 795hPa (0 to 2,000m); During transportation: 1,013 to 701hPa (0 to 3,000m)
Installation location		Inside panel
Device class		Open type apparatus
Overvoltage category		II
Vibration resistance	DIN rail mount	5 to 8.4Hz amplitude 3.5mm 8.4 to 150Hz acceleration 9.8m/s² (1G) 2 hours each on three mutually perpendicular axes (IEC 61131-2)
	Panel mount	
Shock resistance		147m/s² (15G) 11ms axes, 6 directions, 3 times each (IEC 61131-2)
EMC resistance		IEC/EN61131-2, Zone B compatibility

*1) The expanded ambient operating temperatures are applicable to the following versions or higher.
Digital I/O modules : V300 or higher
Analog I/O modules (FC6A-J2C☐, -J4A☐, -J8A☐, -L03CN☐, -J4CN☐) : V300 or higher
Analog I/O modules (FC6A-K2A☐, -J8CU☐, -J4CH☐Y) : V200 or higher
Expansion interface modules : V200 or higher
The expanded ambient operating temperatures are not applicable to FC6A-K4A☐, -L06A☐ analog modules.

• Specify the type of terminal in place of ☐ in the Part No. 1: Screw 4: Push-in

Specifications (FC6A I/O Modules)

Digital I/O module

Digital input modules

Part No.		FC6A–N08B☐	FC6A–N16B☐	FC6A–N16B3	FC6A–N32B3	FC6A–N08A1☐
Input points		8 (8/1 common)	16 (16/1 common)		32 (16/1 common)	8 (4/1 common)
Rated input voltage		12/24V DC sink/source (24V DC for products lower than V400)				100 to 120V AC
Operating input voltage range		0 to 28.8V DC				0 to 132V AC (50/60Hz)
Rated input current		7mA/1 point (at 24V DC), 3.5mA/1 point (at 12V DC)		5mA/1 point (at 24V DC), 2.5mA/1 point (at 12V DC)		15mA/1 point (at 120V AC, 60Hz)
Input impedance		3.4kΩ		4.4kΩ		8kΩ (at 60Hz)
Operating level	OFF voltage	5V maximum				20V maximum
	ON voltage	10.2V minimum (15V or more for products lower than V400)				79V minimum
	OFF current	1.2mA maximum		0.9mA maximum		–
	ON current	2.8mA minimum (4.2mA minimum for products lower than V400)		2.2mA minimum (3.2mA minimum for products lower than V400)		–
Input delay time (24V DC)	OFF - > ON	4.1ms				25ms
	ON - > OFF	4.1ms				30ms
Isolation		Between channels: not isolated Internal Circuit: photocoupler-isolated				Between same common channels: not isolated Between 2 common channels: isolated Between input and internal circuit: photocoupler-isolated
External load for I/O interconnection		Not required				
Signal determination method		Static				
Effect of improper input connection		Both sink and source can be connected. If any input exceeding the rated value is applied, permanent damage may be caused.				If any input exceeding the rated value is applied, permanent damage may be caused.
Cable length		3m in compliance with electromagnetic immunity				–
Internal current draw	All ON	30mA (5V DC) 0mA (24V DC)	40mA (5V DC) 0mA (24V DC)	40mA (5V DC) 0mA (24V DC)	65mA (5V DC) 0mA (24V DC)	40mA (5V DC) 0mA (24V DC)
	All OFF	20mA (5V DC) 0mA (24V DC)	20mA (5V DC) 0mA (24V DC)	20mA (5V DC) 0mA (24V DC)	20mA (5V DC) 0mA (24V DC)	20mA (5V DC) 0mA (24V DC)
Internal power consumption: (at 24V DC while all I/Os are ON)		0.20W	0.27W	0.27W	0.44W	0.27W
Connector	Insertion/ removal durability	100 times				
Weight (approx.)		FC6A-N08B1: 110g FC6A-N08B4: 95g	FC6A-N16B1: 105g FC6A-N16B4: 95g	75g	110g	FC6A-N08A11: 110g FC6A-N08A14: 95g

- Specify the type of terminal in place of ☐ in the Part No. 1: Screw 4: Push-in
- Note: See page 11 for operating conditions.

Specifications (FC6A I/O Modules)

Digital I/O module

Relay output modules

Part No.		FC6A–R08☐	FC6A–R16☐
Output points		8 (4/1 common)	16 (8/1 common)
Output type		1NO contact	
Load current	1 point	2A maximum	
	1 common	7A maximum	8A maximum
Minimum switching load		1mA/5V DC (reference value)	
Initial contact resistance		30mΩ maximum	
Electrical life		100,000 times min. (rated resistance load: 1,800 operations/hour)	
Mechanical life		20 million times min. (no load: 18,000 operations/hour)	
Rated load current		Resistive load: 240V AC 2A, 30V DC 2A Inductive load: 240V AC 2A (cosø = 0.4), 30V DC 2A (L / R = 7ms)	
Dielectric strength		Between output and ground terminals: 2,300V AC, 1 minute Between output terminal and internal circuit: 2,300V AC, 1 minute Between output terminals (between COMs): 2,300V AC, 1 minute	
Internal current draw	All ON	35mA (5V DC) 50mA (24V DC)	50mA (5V DC) 100mA (24V DC)
	All OFF	20mA (5V DC) 0mA (24V DC)	20mA (5V DC) 0mA (24V DC)
Internal power consumption: (at 24V DC while all I/Os are ON)		1.44W	2.74W
Connector	Insertion/removal durability	100 times	
Weight (approx.)		FC6A-R081: 130g FC6A-R084: 115g	FC6A-R161: 140g FC6A-R164: 130g

- Specify the type of terminal in place of ☐ in the Part No. 1: Screw 4: Push-in
- Note: See page 11 for operating conditions.

Transistor output modules

Part No.		FC6A–T08K☐	FC6A–T08P☐	FC6A–T16K☐	FC6A–T16P☐	FC6A–T16K3	FC6A–T16P3	FC6A–T32K3	FC6A–T32P3
Number of output		8 (8/1 common)		16 (16/1 common)				32 (16/1 common)	
Output type		FC6A–T☐K☐: transistor sink output FC6A–T☐P☐: transistor source output							
Rated load voltage		12V/24V DC	24V DC	12V/24V DC	24V DC	12V/24V DC	24V DC	12V/24V DC	24V DC
Input voltage range		10.2 to 28.8V DC	20.4 to 28.8V DC	10.2 to 28.8V DC	20.4 to 28.8V DC	10.2 to 28.8V DC	20.4 to 28.8V DC	10.2 to 28.8V DC	20.4 to 28.8V DC
Load current	1 point	0.5A maximum				0.1A maximum			
	1 common	3A maximum				1A maximum			
Output delay time	OFF - > ON	450µs maximum							
	ON - > OFF	450µs maximum							
Isolation		Between output terminal and internal circuit: Photocoupler-isolated Between output terminals: Not isolated							
Voltage drop (ON voltage)		0.4V maximum: voltage between COM and output terminal when output is on							
Allowable inrush current		1A maximum							
Leakage current		0.1mA maximum							
Clamp voltage		Approx. 50V							
Clamp load		12W maximum				2.4W maximum			
Inductive load		L / R = 10ms (28.8V DC, 1Hz)							
External current draw		FC6A–T☐K☐: 100mA maximum, 12/24V DC (+V terminal power supply) FC6A–T☐P☐: 100mA maximum, 24V DC (-V terminal power supply)							
Overcurrent Protection	Transistor sink output	Not available							
	Transistor source output	Available							
Internal current draw	All ON	25mA (5V DC) 15mA (24V DC)		30mA (5V DC) 25mA (24V DC)				45mA (5V DC) 50mA (24V DC)	
	All OFF	20mA (5V DC) 0mA (24V DC)		20mA (5V DC) 0mA (24V DC)				20mA (5V DC) 0mA (24V DC)	
Internal power consumption: (at 24V DC while all I/Os are ON)		0.53W		0.80W				1.50W	
Connector	Insertion/removal durability	100 times							
Weight (approx.)		FC6A–T08K1/ FC6A–T08P1: 110g		FC6A–T16K1/ FC6A–T16P1: 105g		75g		115g	
		FC6A–T08K4/ FC6A–T08P4: 95g		FC6A–T16K4/ FC6A–T16P4: 95g					

- Specify the type of terminal in place of in place of ☐ in the Part No. 1: Screw 4: Push-in
- Note: See page 11 for operating environment.

Specifications (FC6A I/O Modules)

Digital I/O module

Mixed I/O modules

Part No.			FC6A–M08BR☐	FC6A–M24BR☐
Input specifications	Input points		4 (4/1 common)	16 (16/1 common)
	Rated input voltage		12/24V DC sink/source (24V DC for products lower than V400)	
	Operating input voltage range		0 to 28.8V DC	
	Input current		7mA/1 point (at 24V DC), 3.5mA/1 point (at 12V DC)	
	Input impedance		3.4kΩ	
	Operating level	OFF voltage	5V maximum	
		ON voltage	10.2V minimum (15V minimum for products lower than V400)	
		OFF current	1.2mA maximum	
		ON current	2.8mA minimum (4.2mA minimum for products lower than V400)	
	Input delay time (24V DC)	OFF - > ON	4.1ms	
		ON - > OFF	4.1ms	
	Isolation		Between channels: Not isolated Internal circuit: Photocoupler-isolated	
	External load for I/O interconnection		Not required	
	Signal determination method		Static	
	Effect of improper input connection		Both sink and source input signals can be connected. If any input exceeding the rated value is applied, permanent damage may be caused.	
	Cable length		3m in compliance with electromagnetic immunity	
Output specifications	Number of output		4 (4/1 common)	8 (4/1 common)
	Output type		1NO	
	Load current	1 point	2A maximum	
		1 common	7A maximum	
	Minimum switching load		1mA/5V DC (reference value)	
	Initial contact resistance		30mΩ maximum	
	Electrical life		100,000 times min. (rated resistance load: 1,800 operations/hour)	
	Mechanical life		20 million times min. (no load: 18,000 operations/hour)	
	Rated load current		Resistive load: 240V AC 2A, 30V DC 2A Inductive load: 240V AC 2A (cosø = 0.4), 30V DC 2A (L / R = 7ms)	
	Dielectric strength		Between output and ground terminals: 2,300V AC, 1 minute Between output terminal and internal circuit: 2,300V AC, 1 minute Between output terminals (COMs): 2,300V AC, 1 minute	
	Internal current draw	All ON	30mA (5V DC) 25mA (24V DC)	55mA (5V DC) 50mA (24V DC)
		All OFF	20mA (5V DC) 0mA (24V DC)	20mA (5V DC) 0mA (24V DC)
	Internal power consumption: (at 24V DC while all I/Os are ON)		0.80W	0.97W
	Connector	Insertion/removal durability	100 times	
	Weight (approx.)		FC6A–M08BR1: 120g FC6A–M08BR4: 100g	FC6A–M24BR1: 165g FC6A–M24BR4: 155g

• Specify a terminal type code in place of ☐ in the Part No. 1: Screw, 4: Push-in

Note: See page 11 for operating environment.

Specifications (FC6A I/O Modules)

Analog I/O module

Performance Specifications

Part No.	FC6A–J2C☐	FC6A–J4A☐	FC6A–J8A☐	FC6A–L06A☐ (*2)	FC6A–L03CN☐ (*3)	FC6A–J4CN☐	FC6A–J4CH☐Y	FC6A–J8CU☐	FC6A–K2A☐	FC6A–K4A☐(*2)
Input points	2	4	8	4	2	4	4	8	–	–
Input type	Voltage input (0 to 10V) Voltage input (-10 to +10V) Current input (0 to 20mA) Current input (4 to 20mA)				Voltage input (0 to 10V) Voltage input (-10 to +10V) Current input (0 to 20mA) Current input (4 to 20mA) Thermocouple RTD		Thermocouple	Thermocouple NTC/PTC thermistor resistors	–	–
Output points	–	–	–	2	1	–	–	–	2	4
Output type	–	–	–	Voltage output (0 to 10V) Voltage output (-10 to +10V) Current output (0 to 20mA) Current output (4 to 20mA)		–	–	–	Voltage output (0 to 10V) Voltage output (-10 to +10V) Current output (0 to 20mA) Current output (4 to 20mA)	
External power supply	Rated power voltage: 12V/24V DC; Allowable voltage range: 10.2 to 28.8V DC (24V DC and 20.4 to 28.8V DC for FC6A–L06A☐ and K4A☐)									
External current draw (*1)	50mA (12V DC) 25mA (24V DC)	60mA (12V DC) 30mA (24V DC)	80mA (12V DC) 40mA (24V DC)	100mA (24V DC)	160mA (12V DC) 80mA (24V DC)	80mA (12V DC) 40mA (24V DC)	80mA (12V DC) 40mA (24V DC)	60mA (12V DC) 30mA (24V DC)	140mA (12V DC) 70mA (24V DC)	125mA (24V DC)
Internal current draw (5V DC)	40mA max.	45mA max.	40mA max.	55mA max.	60mA max.	50mA max.	50mA max.	45mA max.	40mA max.	50mA max.
Internal power consumption (at 24V DC)	0.27W	0.30W	0.27W	0.37W	0.37W	0.34W	0.34W	0.30W	0.27W	0.34W
Connector – Insertion/removal durability	100 times									
Weight (approx.)	FC6A–J2C1: 115g FC6A–J2C4: 100g	FC6A–J4A1: 110g FC6A–J4A4: 100g	FC6A–J8A1: 110g FC6A–J8A4: 100g	FC6A–L06A1: 110g FC6A–L06A4: 100g	FC6A–L03CN1: 115g FC6A–L03CN4: 100g	FC6A–J4CN1: 110g FC6A–J4CN4: 100g	FC6A–J4CH1Y: 110g FC6A–J4CH4Y: 100g	FC6A–J8CU1: 110g FC6A–J8CU4: 100g	FC6A–K2A1: 115g FC6A–K2A4: 100g	FC6A–K4A1: 115g FC6A–K4A4: 100g

- Specify the type of terminal in place of ☐ in the Part No. 1: Screw 4: Push-in
- *1) The external current draw is the value when all the analog inputs are used and the analog output value is at 100%.
- *2) FC6A-K4A☐ and -L06A☐ cannot be used under the expanded ambient operating temperature (-25 to -10°C, +55 to +65°C).
- *3) Do not use FC6A-L03CN☐ analog voltage output in an environment exceeding ambient temperature 55°C.
- Note: See page 11 for operating environment.

Input performance specifications by range

Part No.		FC6A–J2C☐		FC6A–J8A☐		FC6A–J4A☐/FC6A–L06A☐	
Input type		Voltage input	Current input	Voltage input	Current input	Voltage input	Current input
Input range		0 to 10V -10 to +10V	0 to 20mA 4 to 20mA	0 to 10V -10 to +10V	0 to 20mA 4 to 20mA	0 to 10V -10 to +10V	0 to 20mA 4 to 20mA
Input impedance		1MΩ minimum	50Ω minimum	1MΩ minimum	50Ω minimum	1MΩ minimum	50Ω minimum
Input detection current		–	–	–	–	–	–
AD conversion	Sampling duration time	1ms		1ms or 10ms (selected in the SX8R Configurator)		1ms or 10ms (selected in the SX8R Configurator)	
	Sampling interval	Sampling duration time x number of active input channels					
	Total input delay time	Sampling duration time + sampling interval + 1 scan time					
	Type of input	Single-ended input					
	Operation mode	Self-scan					
	Conversion method	∑Δ type ADC					
Input error	Maximum error at 25°C	±0.1% of full scale		±0.2% of full scale		±0.2% of full scale	
	Cold junction compensation accuracy	–	–	–	–	–	–
	Temperature coefficient	±0.006%/°C of full scale		±0.01%/°C of full scale		±0.01%/°C of full scale	
Data	Digital resolution	65,536 increments (16 bit)		65,536 increments (16 bit) (* 1)		4,096 increments (12 bit)	
	Input value of LSB	0 to 10V: 0.15mV -10 to +10V: 0.30mV	0 to 20mA: 0.30μA 4 to 20mA: 0.244μA	0 to 10V: 0.15mV -10 to +10V: 0.30mV	0 to 20mA: 0.30μA 4 to 20mA: 0.244μA	0 to 10V: 2.44mV -10 to +10V:4.88mV	0 to 20mA: 4.88μA 4 to 20mA: 3.91μA
	Data type in application program	Optional : -32,768 to +32,767 (selectable for each channel) (*2)					
	Monotonicity	Yes					
	Input data out of range	Detectable (*3)					
Noise Resistance	Input filter	Soft filter (0 to 50 sec, at 0.05 sec intervals) (selectable with SX8R Configurator)					
	Recommended cable	Shielded pair cable					
	Crosstalk	1LSB maximum					
Isolation	Between input and power circuit	Transformer-isolated					
	Between input and internal circuit	Photocoupler-isolated					
Effect of improper input connection		No damage					
Maximum permanent allowed overload (No damage)		30V DC (*4)	160mA (*5)	30V DC	160mA (*5)	30V DC	160mA (*5)
Change input type and range		Use SX8R Configurator					
Calibration or verification to maintain rated accuracy		Not possible					

- Specify the type of terminal in place of ☐ in the Part No. 1: Screw 4: Push-in

*1) FC6A-J8A☐ (Versions earlier than 200) supports 4096 (12 bit) digital resolution. The input values per increment are as follows:
Voltage: 2.44mV (0 to 10 V), 4.88mV (-10 to +10 V) Current: 4.88μA (0 to 20mA), 3.91μA (4 to 20mA)
When using FC6A-J8A☐ (Version 200 or later), the digital resolution can be selected from 12 bits or 16 bits in analog I/O module configuration parameter setting of the SX8R configurator.

*2) The data processed in the analog I/O module can be linear-converted to a value between –32768 and 32767. The optional range designation, and analog I/O data minimum and maximum values can be selected using data registers allocated to analog I/O modules

*3) Input data out of range is reflected in the status of the analog I/O module.

*4) FC6A Ver. 200 and later: voltage input 13V DC, current input 40mA DC

*5) If current of more than 160mA is applied at 25°C, a protect function works to protect the input circuit by reducing current. However, when a current is applied at a voltage of more than 30V DC, the circuit will be damaged.

Specifications (FC6A I/O Modules)

Analog I/O module

Input performance specifications by range

Part No.		FC6A–L03CN□/FC6A–J4CN□				FC6A–J4CH□Y	FC6A–J8CU□		
Input type		Voltage input	Current input	Resistance thermometer	Thermocouple	Thermocouple	Thermocouple	NTC thermistor	PTC thermistor
Input range		0 to 10V -10 to +10V	0 to 20mA 4 to 20mA	Pt100 (-200 to +850ºC) Pt1000 (-200 to +600ºC) (3-wire) Ni100 (-60 to +180ºC) Ni1000 (-60 to +180ºC) (3-wire)	K type (-200 to +1,300ºC) J type (-200 to +1,000ºC) R type (0 to 1,760ºC) S type (0 to 1,760ºC) B type (0 to 1,820ºC) E type (-200 to +800ºC) T type (-200 to +400ºC) N type (-200 to +1,300ºC) C type (0 to 2,315ºC)			-90 to +150ºC	100 to 10,000Ω
Input impedance		1MΩ min.	50Ω max.	1MΩ min.	1MΩ min.	2MΩ min.	1MΩ min.	1MΩ min.	
Input detection current		–	–	0.1mA maximum	0.1mA maximum	0.1mA maximum	0.1mA maximum	0.1mA maximum	
AD conversion	Sampling duration time	10ms, 100ms (Selectable with SX8R Configurator)		104ms		30ms, 120ms (Selectable in SX8R Configurator)	104ms		
	Sampling intervals	Sampling duration time x number of active input channels							
	Total delay time	Sampling duration time + sampling interval + 1 scan time							
	Input type	Single end				Differential input	Single end		
	Operation mode	Self-scan							
	Conversion method	∑Δ type ADC							
Input error	Maximum error at 25˚C	±0.1% of full scale		FC6A–L03CN□: ±0.1% of full scale + cold junction compensation accuracy FC6A–J4CN□: ±0.2% of full scale + cold junction compensation accuracy (*3)		±0.2% of full scale + cold junction compensation accuracy (*3)	±0.2% of full scale + cold junction compensation accuracy (*3)	±0.2% of full scale	
	Cold junction compensation accuracy	–	–	–	±4ºC max.	±4ºC max.	±4ºC max.		
	Temperature coefficient	FC6A–L03CN□: ±0.006% of full scale/ºC FC6A–J4CN□: ±0.01% of full scale/ºC				±0.01% of full scale/ºC	±0.01% of full scale/ºC		
Data	Digital resolution	65,536 increments (16 bit)		Pt100: approx. 10,500 increments (14 bits) Pt1000:approx. 8,000 increments (13 bits) Ni100:approx. 2,400 increments (12 bits) Ni1000:approx. 2,400 increments (12 bits)	K type: approx. 15,000 increments (14 bits) J type: approx. 12,000 increments (14 bits) R type: approx. 17,600 increments (15 bits) S type: approx. 17,600 increments (15 bits) B type: approx. 18,200 increments (15 bits) E type: approx. 10,000 increments (14 bits) T type: approx. 6,000 increments (13 bits) N type: approx. 15,000 increments (14 bits) C type: approx. 23,150 increments (15 bits)			NTC: approx. 2,400 increments (12 bits) PTC: approx. 9,900 increments (14 bits)	
	Input values per increment	0 to 10V: 0.15mV -10 to +10V: 0.30mV	0 to 20mA: 0.30μA 4 to 20mA: 0.244μA	0.1ºC	0.1ºC	0.1ºC	0.1ºC	0.1ºC	1Ω
	Data type in application program	Optional: -32,768 to +32,767 (selectable for each channel) (*1)							
	Monotonicity	Yes							
	Input data out of range	Detectable (*2)							
Noise Immunity	Input filter	Soft filter (0 to 50 sec, at 0.05 sec intervals) (selectable with SX8R Configurator)							
	Recommended cable for noise immunity	Shielded pair cable		Non shielded pair cable					
	Crosstalk	1LSB maximum							
Isolation	Between input and power circuit	Transformer-isolated							
	Between input and internal circuit	Photocoupler-isolated							
	Between inputs	Not isolated				Photocoupler-isolated	Not isolated		
Effect of improper input connection		No damage							
Maximum permanent allowed overload (No damage)		30V DC (*4)	160mA (*5)	13V DC					
Change input type and range		Use SX8R Configurator							
Calibration or verification to maintain rated accuracy		Not possible							

• Specify a terminal type code in place of □ in the Part No. 1: Screw terminal, 4: push-in type.

*1)The data processed in the analog I/O module can be linear-converted to a value between –32768 and 32767. The optional range designation, and analog I/O data minimum and maximum values can be selected using data registers allocated to analog I/O modules

*2) When an error is detected, a corresponding error code is stored to a data register allocated to analog I/O operating status.

*3) R, S: ±6 (0 to 200°C) B: no compensation K, J, E, T, N: ±0.4% of full scale (0°C maximum)

*4) For modules of version 200 or earlier, the maximum permanent allowed overload is when the voltage input is set at 13V DC and the current input is set at 40mA.

*5) If current of more than 160mA is applied at 25°C, a protect function works to protect the input circuit by reducing current. However, when a current is applied at a voltage of more than 30V DC, the circuit will be damaged.

Specifications (FC6A I/O Modules)

Analog I/O module

Output performance specifications by range

Part No.			FC6A-K2A□/FC6A-L03CN□	FC6A-K4A□/FC6A-L06A□
Output type Output range	Voltage		0 to 10V DC -10 to +10V DC	
	Current		0 to 20mA 4 to 20mA	
Load	Impedance		1kΩ minimum (voltage), 300Ω maximum (current)	
	Load type		Resistive load	
DA conversion	DA conversion time		1ms	
	Output update intervals		1ms	
	Total output system transfer time		DA conversion time + output update interval + 1 scan time	
Output error	Maximum error at 25˚C		±0.1% of full scale	±0.2% of full scale
	Temperature coefficient		±0.006%/ºC of full scale	±0.01%/ºC of full scale
	Repeatability after stabilization time		±0.4% of full scale	
	Output voltage drop		No damage	
	Non-linearity		±0.01% of full scale	±0.2% of full scale
	Output ripple		Max. 20mV	
	Overshoot		0%	
	Total error		±1% of full scale	
Data	Digital resolution		4,096 increments (12 bit)	
	Output value of LSB	Voltage	0 to 10V DC: 2.44mV -10 to +10V DC: 4.88mV	
		Current	0 to 20mA: 4.88µA 4 to 20mA: 3.91µA	
	Data type in application program		Optional : -32,768 to +32,767 (selectable for each channel)	
	Monotonicity		Yes	
	Current loop open		Undetectable	
Noise Immunity	Recommended cable for noise immunity		Shielded pair cable	
	Crosstalk		1LSB	
Isolation	Between output and power circuit		Trans isolation	
	Between output and internal circuit		Photocoupler-isolated	
Effects of improper output connection			Non-destructive	
Change output type			Use SX8R Configurator	
Calibration or verification to maintain rated accuracy			Not possible	

• Specify the type of terminal in place of □ in the Part No. 1: Screw 4: Push-in
Note: See page 11 for operating environment.

Specifications (FC6A Expansion Interface Modules)

Expansion interface module

Unibody

Part No.		FC6A–EXM2□
I/O expansion	Between CPU module and expansion interface module	Connectable I/O modules: 7 maximum (224 I/Os maximum)
	Beyond the expansion interface module	Connectable I/O modules: 8 maximum (256 I/Os maximum)
Rated power voltage		24V DC
Allowable voltage range		20.4 to 28.8V DC
Power consumption	Internal power	Internal power (supplied from CPU module): 20mA (5V DC), 0mA (24V DC)
	External power	With I/O modules (*1) 750mA (26.4V DC)
Maximum power consumption (*1) (external power)		0.5W (24V DC)
Allowable momentary power interruption		10ms maximum (24V DC)
Isolation between internal circuit		Not isolated
No. of connectable CPU		1
Connector	Insertion/removal durability	100 times
Weight (approx.)		150g

• Specify the type of terminal in place of □ in the Part No. 1: Screw 4: Push-in
*1) Power consumption by the expansion interface module and eight I/O modules.
Note: See page 11 for operating environment.

External Dimensions (FC6A I/O Modules and FC6A Expansion Interface Modules)

All dimensions in mm

I/O modules

FC6A–N08B□ /FC6A–N08A1□/FC6A–R08□
FC6A–T08K□ /FC6A–T08P□ /FC6A–M08BR□
FC6A–J2C□ /FC6A-K2A□ /FC6A–K4A□
FC6A–L03CN□

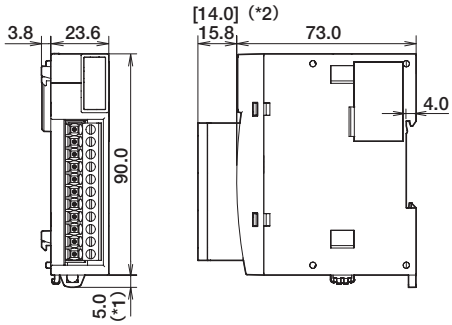

FC6A–N16B□ /FC6A–R16□ /FC6A–T16K□
FC6A–T16P□ /FC6A–J4A□ /FC6A–J8A□
FC6A–J4CN□ /FC6A–J4CH□Y/FC6A–J8CU□
FC6A–L06A□

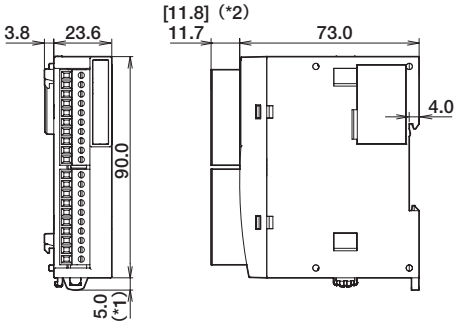

FC6A–N16B3/FC6A–T16K3
FC6A–T16P3

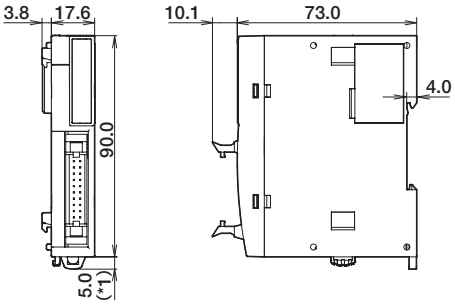

FC6A–N32B3/FC6A–T32K3
FC6A–T32P3

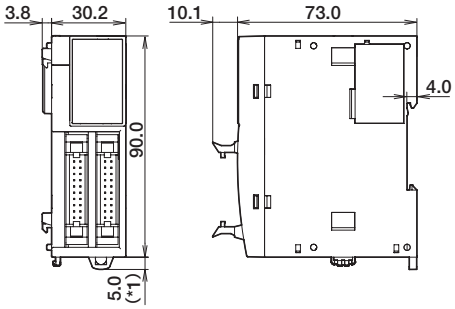

FC6A–M24BR□

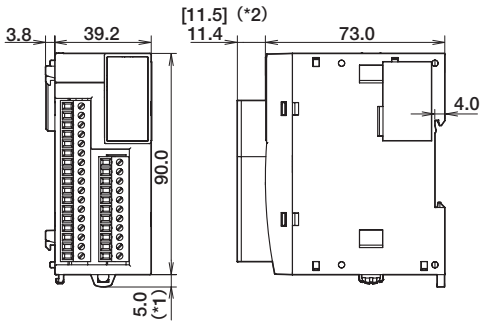

Expansion interface modules

Unibody

FC6A–EXM2□

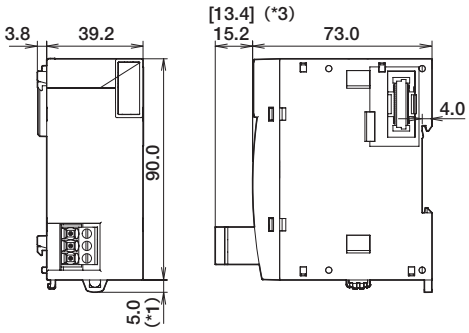

Safety Precautions ⚠

- Turn off the power to the product before starting installation, removal, wiring, maintenance, and inspection of the products. Failure to turn power off may cause electrical shock or fire.

Instructions

- The SX8R bus coupler module is not designed for use in applications requiring a high degree of reliability and safety. Do not use it for such applications.
- When using the product in applications that require high reliability in terms of function and precision, appropriate measures such as fail-safe and redundant mechanisms must be taken for the entire system. The following are specific examples.
  - Emergency stop circuits and interlock circuits should be configured in circuits external to the SX8R bus coupler module.
  - The SX8R bus coupler module is equipped with a self-diagnostic function that can detect any abnormalities in the internal circuits or user data. In case of detection of any abnormalities, the output may be turned off. The circuit should be configured so that the incorporated systems do not fall into a dangerous situation when the output is off.
- Turn off the power to the product before starting installation, removal, wiring, maintenance, and inspection of the products. Failure to turn power off may cause damage, electrical shocks or fire hazard.
- Special expertise is required to install, wire, create a project and operate the product. Persons without such expertise must not use the product.
- Install the product according to the instructions described in the User's Manual. Improper installation will result in falling, failure, electrical shock, fire hazard, or malfunction of the product.
- This product is designed for installation within equipment. Do not install this product outside the relevant equipment.
- Use the product according to the environmental requirements described in the manual. Use of the product in high-temperature or high-humidity environments, or in locations where it is exposed to condensation, corrosive gas or excessive vibration or shocks, can create the risk of electrical shocks, fire, failure, or malfunction.
- This product is designed for use in Pollution Degree 2 environment. Use this product in environments of pollution degree 2. (According to the IEC 60664-1 rating)
- Prevent this product from falling while moving or transporting, otherwise damage or malfunction of this product may result.
- For wiring, use wires of the proper size to meet the voltage and current requirements. Tighten the terminal screws to the specified tightening torque.
- Be sure to prevent metal fragments or wire chips from dropping inside this product housing. Ingress of such fragments and chips may cause fire hazard, damage or malfunction.
- Use a power supply of the rated value. Using a power supply that do not have the specified ratings may cause fire or malfunction.
- Use an IEC 60127 compliant fuse on the outside of the power line. (This is required when exporting equipment incorporating the SX8R bus coupler module to Europe.)
- Use an IEC 60127 compliant fuse for an FC6A I/O module. (This is required when exporting equipment incorporating the SX8R bus coupler module to Europe.)
- Use an EU-approved circuit protector. (This is required when exporting equipment incorporating the SX8R bus coupler module to Europe.)
- This product may not be connected directly to communication lines (including public wireless LAN) of telecommunications companies (mobile network operators, fixed-line telecoms companies, Internet providers, etc.). When connecting this product to the Internet, make sure to connect it via a router or an equivalent device.
- Do not connect this product directly to the protective earth. Ground the protective earth using a screw of M4 or larger. (This is required when exporting equipment incorporating the SX8R bus coupler module to Europe.)
- Do not disassemble, repair or modify the product.

Be sure to read instruction manual carefully before performing installation, wiring, or maintenance work of the SX8R bus coupler module.

For details on mounting, wiring, and maintenance, see the User's Manual from the URL below.

URL: http://product.idec.com/?product=SX8R-EC

Ordering Terms and Conditions

Thank you for using IDEC Products.

By purchasing products listed in our catalogs, datasheets, and the like (hereinafter referred to as "Catalogs") you agree to be bound by these terms and conditions. Please read and agree to the terms and conditions before placing your order.

1. Notes on contents of Catalogs

(1) Rated values, performance values, and specification values of IDEC products listed in this Catalog are values acquired under respective conditions in independent testing, and do not guarantee values gained in combined conditions.
Also, durability varies depending on the usage environment and usage conditions.

(2) Reference data and reference values listed in Catalogs are for reference purposes only, and do not guarantee that the product will always operate appropriately in that range.

(3) The specifications / appearance and accessories of IDEC products listed in Catalogs are subject to change or termination of sales without notice, for improvement or other reasons.

(4) The content of Catalogs is subject to change without notice.

2. Note on applications

(1) If using IDEC products in combination with other products, confirm the applicable laws / regulations and standards.
Also, confirm that IDEC products are compatible with your systems, machines, devices, and the like by using under the actual conditions. IDEC shall bear no liability whatsoever regarding the compatibility with IDEC products.

(2) The usage examples and application examples listed in Catalogs are for reference purposes only. Therefore, when introducing a product, confirm the performance and safety of the instruments, devices, and the like before use. Furthermore, regarding these examples, IDEC does not grant license to use IDEC products to you, and IDEC offers no warranties regarding the ownership of intellectual property rights or non-infringement upon the intellectual property rights of third parties.

(3) When using IDEC products, be cautious when implementing the following.

i. Use of IDEC products with sufficient allowance for rating and performance

ii. Safety design, including redundant design and malfunction prevention design that prevents other danger and damage even in the event that an IDEC product fails

iii. Wiring and installation that ensures the IDEC product used in your system, machine, device, or the like can perform and function according to its specifications

(4) Continuing to use an IDEC product even after the performance has deteriorated can result in abnormal heat, smoke, fires, and the like due to insulation deterioration or the like. Perform periodic maintenance for IDEC products and the systems, machines, devices, and the like in which they are used.

(5) IDEC products are developed and manufactured as general-purpose products for general industrial products. They are not intended for use in the following applications, and in the event that you use an IDEC product for these applications, unless otherwise agreed upon between you and IDEC, IDEC shall provide no guarantees whatsoever regarding IDEC products.

i. Use in applications that require a high degree of safety, including nuclear power control equipment, transportation equipment (railroads / airplanes / ships / vehicles / vehicle instruments, etc.), equipment for use in outer space, elevating equipment, medical instruments, safety devices, or any other equipment, instruments, or the like that could endanger life or human health

ii. Use in applications that require a high degree of reliability, such as provision systems for gas / waterworks / electricity, etc., systems that operate continuously for 24 hours, and settlement systems

iii. Use in applications where the product may be handled or used deviating from the specifications or conditions / environment listed in the Catalogs, such as equipment used outdoors or applications in environments subject to chemical pollution or electromagnetic interference
If you would like to use IDEC products in the above applications, be sure to consult with an IDEC sales representative.

3. Inspections

We ask that you implement inspections for IDEC products you purchase without delay, as well as thoroughly keep in mind management/maintenance regarding handling of the product before and during the inspection.

4. Warranty

(1) Warranty period

The warranty period for IDEC products shall be three (3) years after purchase or delivery to the specified location. However, this shall not apply in cases where there is a different specification in the Catalogs or there is another agreement in place between you and IDEC.

(2) Warranty scope

Should a failure occur in an IDEC product during the above warranty period for reasons attributable to IDEC, then IDEC shall replace or repair that product, free of charge, at the purchase location / delivery location of the product, or an IDEC service base. However, failures caused by the following reasons shall be deemed outside the scope of this warranty.

i. The product was handled or used deviating from the conditions / environment listed in the Catalogs

ii. The failure was caused by reasons other than an IDEC product

iii. Modification or repair was performed by a party other than IDEC

iv. The failure was caused by a software program of a party other than IDEC

v. The product was used outside of its original purpose

vi. Replacement of maintenance parts, installation of accessories, or the like was not performed properly in accordance with the user's manual and Catalogs

vii. The failure could not have been predicted with the scientific and technical standards at the time when the product was shipped from IDEC

viii. The failure was due to other causes not attributable to IDEC (including cases of force majeure such as natural disasters and other disasters)

Furthermore, the warranty described here refers to a warranty on the IDEC product as a unit, and damages induced by the failure of an IDEC product are excluded from this warranty.

5. Limitation of liability

The warranty listed in this Agreement is the full and complete warranty for IDEC products, and IDEC shall bear no liability whatsoever regarding special damages, indirect damages, incidental damages, or passive damages that occurred due to an IDEC product.

6. Service scope

The prices of IDEC products do not include the cost of services, such as dispatching technicians. Therefore, separate fees are required in the following cases.

(1) Instructions for installation / adjustment and accompaniment at test operation (including creating application software and testing operation, etc.)

(2) Maintenance inspections, adjustments, and repairs

(3) Technical instructions and technical training

(4) Product tests or inspections specified by you

The above content assumes transactions and usage within your region. Please consult with an IDEC sales representative regarding transactions and usage outside of your region. Also, IDEC provides no guarantees whatsoever regarding IDEC products sold outside your region.

IDEC CORPORATION

Head Office 6-64, Nishi-Miyahara-2-Chome, Yodogawa-ku, Osaka 532-0004, Japan

www.idec.com

USA IDEC Corporation
EMEA APEM SAS
Singapore IDEC Izumi Asia Pte. Ltd.
Thailand IDEC Asia (Thailand) Co., Ltd.
India IDEC Controls India Private Ltd.
China IDEC (Shanghai) Corporation
IDEC Izumi (H.K.) Co., Ltd.
Taiwan IDEC Taiwan Corporation
Japan IDEC Corporation

EP1824-0