IDEC

Think Automation and beyond...

Display Units

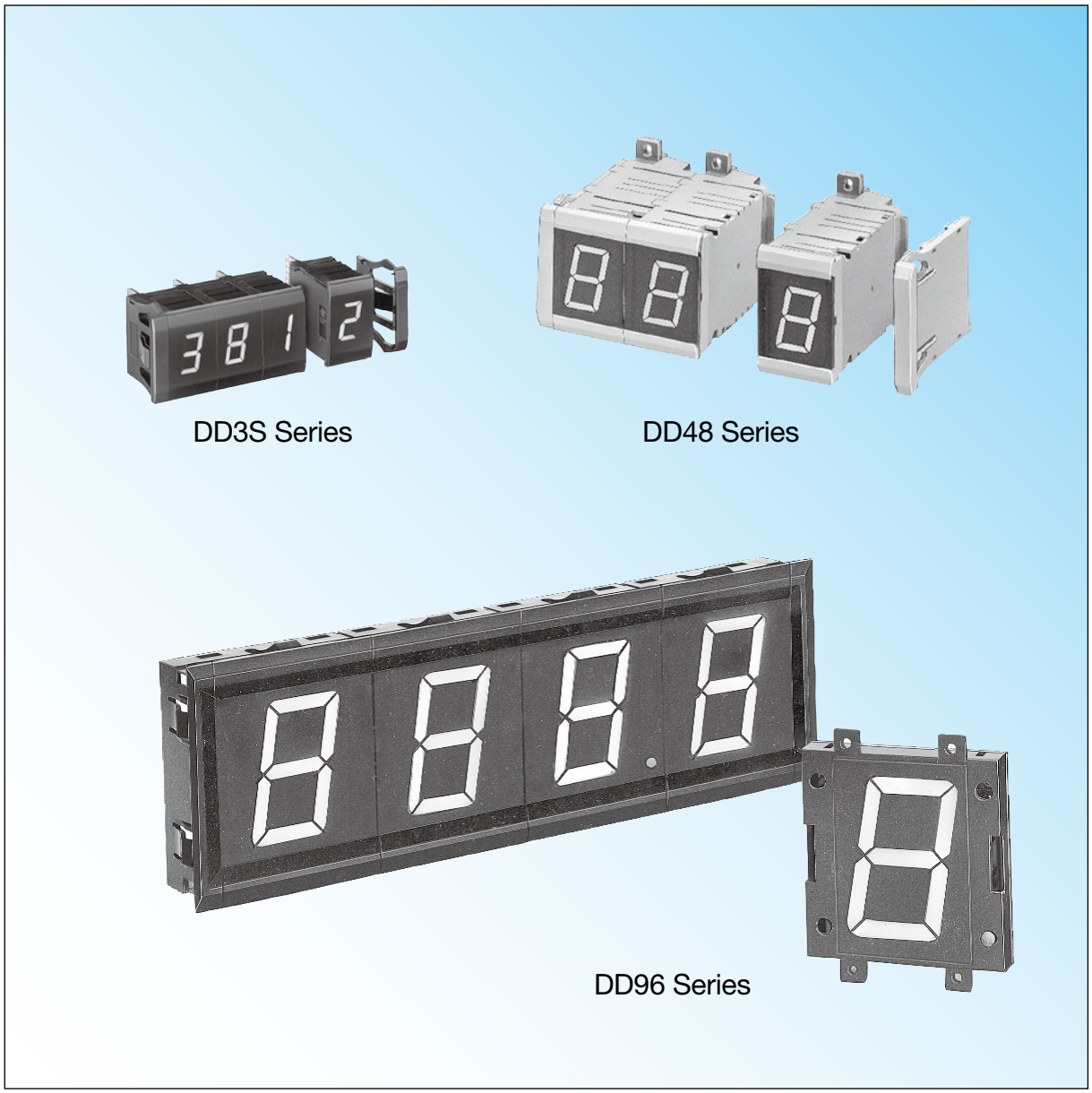

IDEC CORPORATION

Display Units (Selection Guide)

Series	DD3S	
Shape		
Unit Type	Decimal/Hexadecimal/Extra Decimal	
Display Part (mm)	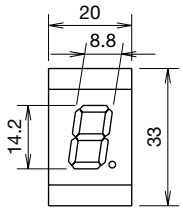 7-segment Red LED, Green LED	
Display Character	Decimal display unit: 0 to 9, decimal point Hexadecimal display unit: 0 to F, decimal point Extra decimal display unit: 0 to 9, −, –, _, =, =, decimal point	
Function	Standard	Zero-suppress
Input	Binary Latch BL LT DP	Binary Latch BL LT RBI DP
Output	—	RBO
Input Logic	Positive or negative	
Data Input Level	L: 0 to 2V H: 9 to 30V	
Power Voltage	12 to 24V DC ±10%	
Current Draw (Power Consumption) (approx.)	Red: 40 mA max. Green: 60 mA max.	
No. of Digits	8 digits max. (1 digit/unit)	
Panel Mounting	Front mount, snap fit	
Housing Color	Black (End plate: black)	
Connector	•Solder terminal, PC board terminal, wire-wrap terminal (optional) •Mother board: Dynamic (4- or 2-digit, optional) Static (4-, 3-, or 2-digit, optional) •Mother board: 4 digits (optional)	
Dimensions	33H × 20W × 45.5D mm/unit	
Weight (approx.)	Display unit: 16.0g End plates (pair): 4.5g	
See Page	4 to 15	

	DD48		DD96
			Front Mount Rear Mount
	Binary	Decimal	Decimal
	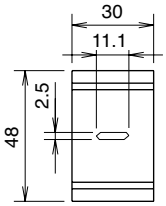 – (minus) Red or green LED	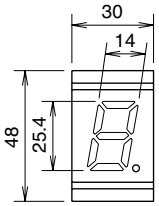 7-segment Red or green LED	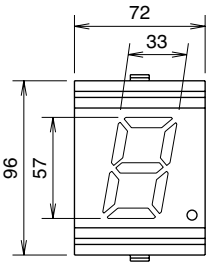 7-segment Red LED
	– (minus)	0 to 9 Decimal point	0 to 9 Decimal point
	—	—	—
	– Latch BL	Binary Latch DP RBI	Binary Latch DP BI
	—	RBO	BO
	Positive or negative		Negative
	L: 0 to 2V H: 12 to 30V		L: 0 to 2V H: 12 to 30V
	24V DC ±10%		24V DC ±10%
	0.9W	2.0W	80 mA
	16 digits max. (1 digit/unit)		8 digits max. (1 digit/unit)
	Front mount, snap fit		Front mount: Snap fit Rear mounting: Screw mounting
	Black or beige		Black
	•Solder terminal, PC board terminal (optional)		•Solder terminal (supplied)
	48H × 30W × 79D mm/unit		Front mount: 96H × 72W × 42.5D mm/unit Rear mount: 90H × 72W × 41D mm/unit
	Display unit: 50g End plates: 20g (pair)		Front mount: 130g Rear mount: 100g End plates: 26g (pair)
	16 to 22		**23 to 26**

DD3S Series Display Units

7-segment digital display
Super bright LED display and short body for up to 8 digits

- Super bright LED for easy reading
- Units can be combined together and installed into a panel cut-out.
- Decimal, hexadecimal, extra decimal, and character display units are available.
- Positive or negative input logic
- Easy wiring and maintenance
- Power voltage 12 through 24V DC.
- Mother boards are available for dynamic and static display modes; substantial saving of wiring.

DD3S

Display Units (Housing Color: Black)

Notation	Function	Input Logic	LED Color	Part No.
Decimal	Standard	Positive	Red	**DD3S-F31P-R**
			Green	**DD3S-F31P-G**
		Negative	Red	**DD3S-F31N-R**
			Green	**DD3S-F31N-G**
	Zero-suppress	Positive	Red	**DD3S-F31P-R-S**
			Green	**DD3S-F31P-G-S**
		Negative	Red	**DD3S-F31N-R-S**
			Green	**DD3S-F31N-G-S**
Extra Decimal	Standard	Positive	Red	**DD3S-F34P-R**
			Green	**DD3S-F34P-G**
		Negative	Red	**DD3S-F34N-R**
			Green	**DD3S-F34N-G**
	Zero-suppress	Positive	Red	**DD3S-F34P-R-S**
			Green	**DD3S-F34P-G-S**
		Negative	Red	**DD3S-F34N-R-S**
			Green	**DD3S-F34N-G-S**
Hexadecimal	Standard	Positive	Red	**DD3S-F36P-R**
			Green	**DD3S-F36P-G**
		Negative	Red	**DD3S-F36N-R**
			Green	**DD3S-F36N-G**
	Zero-suppress	Positive	Red	**DD3S-F36P-R-S**
			Green	**DD3S-F36P-G-S**
		Negative	Red	**DD3S-F36N-R-S**
			Green	**DD3S-F36N-G-S**

Ordering Information

1. Specify the Part No. and quantity of the display units and accessories.

(Example) Display Unit DD3S-F31P-R 8 pcs
Accessories
- Spacer Unit DD9Z-FY1-B 1 pc
- End Plate DD9Z-W-B 1 set
- Mother Board DD9Z-MB1-4 2 pcs

2. Order spacer units, end plates, and mother boards separately.
See the next page.

Accessories (Optional)

Name			Part No.
Spacer Unit	Black		**DD9Z-FY1-B**
End Plate (pair)	Black		**DD9Z-W-B**
Connector	Solder Terminal		**DMC-1**
	PC Board Terminal		**DMC-2**
Retentive/One-way Insertion Connector	Solder Terminal		**DD9Z-CN1**
Connector Stopper			**DD9Z-ST1**
Mother Board for decimal/hex/extra decimal display unit	Dynamic	4-digit	**DD9Z-MB1-4**
		2-digit	**DD9Z-MB1-2**
	Static	4-digit	**DD9Z-MB2-4**
		3-digit	**DD9Z-MB2-3**
		2-digit	**DD9Z-MB2-2**
Mother Board Connector	Type B		**DD9Z-JE1B□**
	Type C		**DD9Z-JE1C□**
Coupling Spacer for IDEC DG Series Digital Switches	Right Side	Black	**DD9Z-FG1R-B**
	Left Side	Black	**DD9Z-FG1L-B**

Cable Length Code

Specify a cable length code in place of □ in the Part No. of mother board cable types A, B, and C. These cables can be used for both dynamic and static type mother boards.

Code	01	02	03	05	10
Cable Length (mm)	100	200	300	500	1000
Code	15	20	30	40	50
Cable Length (mm)	1500	2000	3000	4000	5000

Specifications

Power Voltage	12 to 24V DC ±10%
Current Draw: Decimal/ Hex/ Extra decimal	40 mA max. (red) 60 mA max. (green)
Data Input Level	L: 0 to 2V H: 9 to 30V
Display Character (see Function Tables)	• Decimal display unit 7-segment 1-color (red or green) LED: 0 to 9, decimal point • Extra decimal display unit 7-segment 1-color (red or green) LED: 0 to 9, ⁻, –, _, ⁼, =, decimal point • Hexadecimal display unit 7-segment 1-color (red or green) LED: 0 to 9, A to F, decimal point
Character Height	• Decimal/Hex/Extra Decimal display units: 15.2 mm
Input	• Decimal/Hex/Extra Decimal display units: <Standard> Binary, Latch, BL, LT, DP <Zero-suppress> Binary, Latch, BL, LT, DP, RBI
Output	• Decimal/Hex/Extra Decimal display units: <Zero-suppress> RBO output
Input Logic	Positive or negative
No. of Digits	8 digits max.
Unit Combination	Snap fit
Panel Mounting	Snap fit
Dielectric Strength	• Decimal/Hex/Extra decimal display units Between live and dead parts : 1500V DC, 1 minute
Insulation Resistance	Between live and dead parts : 100 MΩ min. (500V DC megger)
Vibration Resistance (damage limits)	10 to 55 Hz, amplitude 0.25 mm
Shock Resistance (damage limits)	490 m/s²
Noise Resistance (operating extremes)	• Decimal/Hex/Extra decimal display unit Power terminal (normal/common modes): ±1000V Input terminal (normal/common modes): ±1000V Output terminal (normal/common modes): ±500V (Impulse condition: Pulse width 100 ns, 1 µs)
Operating Temperature	–10 to +55°C (no freezing)
Storage Temperature	–25 to +80°C (no freezing)
Operating Humidity	35 to 85% RH (no condensation)
Power Inrush Current	• Decimal/Hex/Extra decimal display unit Approx. 2.0A (Power voltage: 24V)
Degree of Protection	IP40 (IEC60529)
Weight (Approx.)	• Display unit: 16g • End plates: 4.5g (pair)

Terminal Connection

	Connection Diagram	Terminal Arrangement	Internal Input Circuit
Decimal/Hexadecimal/Extra Decimal Display Units	Standard	Standard	Positive Logic
	Zero-suppress	Zero-suppress	Negative Logic

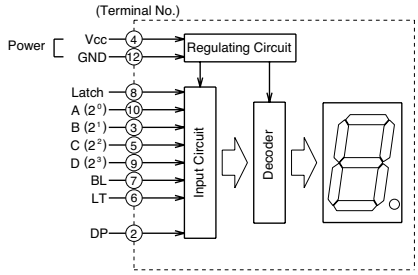

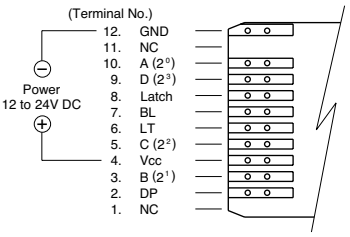

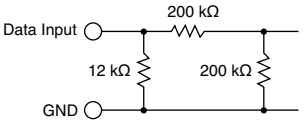

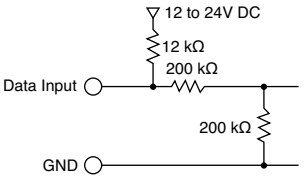

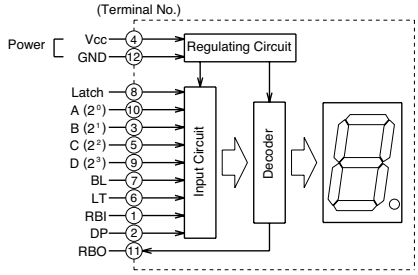

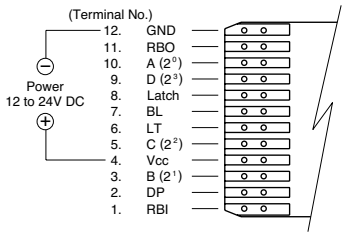

External Wiring

Decimal/Hexadecimal/Extra Decimal Display Units

Positive Logic

[Contact Input (Digital Switch)]

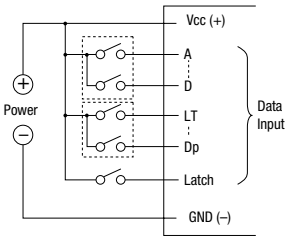

[Transistor Input]

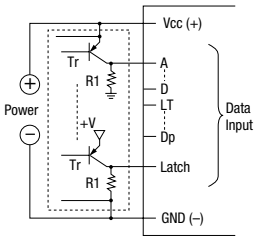

When Tr is on, output goes to H.

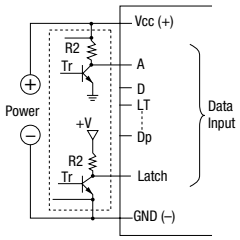

When Tr is off, output goes to H.

Negative Logic

[Contact Input (Digital Switch)]

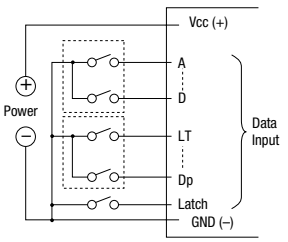

[Transistor Input]

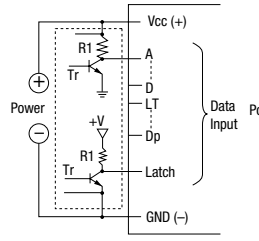

When Tr is on, output goes to L.

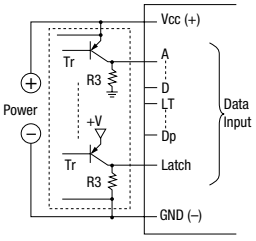

When Tr is off, output goes to L.

Note: When connecting pull-up or pull-down resistors to the external circuit, refer to the resistor values shown below:

R1: 2.2 kΩ (1/2W) to 10 kΩ (1/4W)
R2: 1 kΩ (1W) to 2.2 kΩ (1/2W)
R3: 1 kΩ (1W)

Connector Terminal No.

(DMC-1)

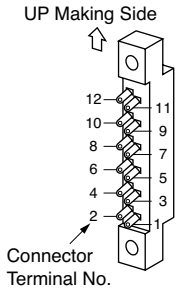

Function Table

Decimal/Hexadecimal/Extra Decimal Display Units

(Standard and Zero-suppress)

Data Input																LED Display		
Positive Logic								Negative Logic								Dec.	Hex.	Extra Dec.
D	C	B	A	Latch	LT	BL	DP	D	C	B	A	Latch	LT	BL	DP			
×	×	×	×	×	H	×	×	×	×	×	×	×	L	×	×	8.	8.	8.
×	×	×	×	×	L	H	×	×	×	×	×	×	H	L	×	blank	blank	blank
×	×	×	×	×	L	L	H	×	×	×	×	×	H	H	L	∗.	∗.	∗.
L	L	L	L	L	L	L	L	H	H	H	H	H	H	H	H	0	0	0
L	L	L	H	L	L	L	L	H	H	H	L	H	H	H	H	1	1	1
L	L	H	L	L	L	L	L	H	H	L	H	H	H	H	H	2	2	2
L	L	H	H	L	L	L	L	H	H	L	L	H	H	H	H	3	3	3
L	H	L	L	L	L	L	L	H	L	H	H	H	H	H	H	4	4	4
L	H	L	H	L	L	L	L	H	L	H	L	H	H	H	H	5	5	5
L	H	H	L	L	L	L	L	H	L	L	H	H	H	H	H	6	6	6
L	H	H	H	L	L	L	L	H	L	L	L	H	H	H	H	7	7	7
H	L	L	L	L	L	L	L	L	H	H	H	H	H	H	H	8	8	8
H	L	L	H	L	L	L	L	L	H	H	L	H	H	H	H	9	9	9
H	L	H	L	L	L	L	L	L	H	L	H	H	H	H	H	blank	A	–
H	L	H	H	L	L	L	L	L	H	L	L	H	H	H	H	blank	b	_
H	H	L	L	L	L	L	L	L	L	H	H	H	H	H	H	blank	C	¯
H	H	L	H	L	L	L	L	L	L	H	L	H	H	H	H	blank	d	=
H	H	H	L	L	L	L	L	L	L	L	H	H	H	H	H	blank	E	¯
H	H	H	H	L	L	L	L	L	L	L	L	H	H	H	H	blank	F	blank
×	×	×	×	H	L	L	L	×	×	×	×	L	H	H	H	maintain	maintain	maintain

Note 1: × indicates the display is not affected by voltage level of H or L.
Note 2: ∗ A decimal point is displayed with any character.

Input Functions

A, B, C, and D (binary code) Inputs

These inputs are decimal or data corresponding to 1, 2, 4, and 8, respectively.

Latch Input

When the Latch input is set to level H for the positive logic or level L for the negative logic, the display at the time is maintained. (DP input is independent.)

LT (Light Test) Input

When the LT input is set to level H for the positive logic or level L for the negative logic, the entire display turns on.

BL (Blank) Input

When the BL input is set to level H for the positive logic or level L for the negative logic, the entire display turns off regardless of other inputs.

DP (Decimal Point) Input

When the DP input is set to level H for the positive logic or level L for the negative logic, the decimal point turns on.

(Zero-suppress Unit)

Leading zeros are suppressed using the RBI (No. 1) and RBO (No. 11) terminals. For other inputs, see the lower table on the preceding page.

Decimal/Hexadecimal/Extra Decimal														LED Display
Data Input														
Positive Logic							Negative Logic							
X	Latch	LT	BL	DP	RBI	RBO	Y	Latch	LT	BL	DP	RBI	RBO	
×	×	H	×	×	×	#	×	×	L	×	×	×	&	8.
×	×	L	H	×	×	#	×	×	H	L	×	×	&	blank
H	L	L	L	L	L	L	H	H	H	H	H	L	L	blank
H	L	L	L	L	H	H	H	H	H	H	H	H	H	0
H	L	L	L	H	L	H	H	H	H	H	L	L	H	0.
L	L	L	L	L	L	H	L	H	H	H	H	L	H	∗

X: $X = \overline{A} \cdot \overline{B} \cdot \overline{C} \cdot \overline{D}$ ∗: Any display
Y: $Y = A \cdot B \cdot C \cdot D$ #: $\overline{\#} = \overline{DP} \cdot \overline{RBI} \cdot X$
×: Either H or L &: $\overline{\&} = DP \cdot \overline{RBI} \cdot Y$

Note: RBI and RBO operate in the negative logic mode on both positive and negative logic units.

Input and Output Functions

RBI Input

When 0 is displayed and the decimal point is turned off, the display is blanked by setting the RBI input to level L.

RBO Output

The RBO output remains in level L during zero blanking. Leading zeros can be suppressed by connecting the RBO to the RBI on the lower digits.

The RBO output is an open collector output.

Application Examples of RBI and RBO

[Ex.1] Leading zeros are also displayed. RBI and RBO outputs are disconnected.
[Ex.2] Leading zeros on the upper three digits are suppressed. When the data on the 1st digit is zero, 0 is displayed.
[Ex.3] Zero on the 4th digit is suppressed. Zero and decimal point are displayed on the 3rd digit.
[Ex.4] Trailing zeros on the 2nd and 1st digits are suppressed. When the data on the 1st and 4th digits are zero, and the decimal point on the 4th digit is on, 0.0 is displayed with zeros on the 2nd and 1st digits suppressed.

Note: Use the RBO output only for connection to the RBI input. Do not use the RBO for other connections.

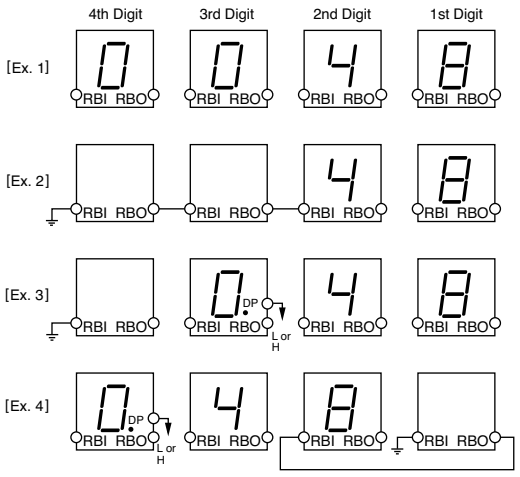

Dimensions & Panel Cut-out

All dimensions in mm.

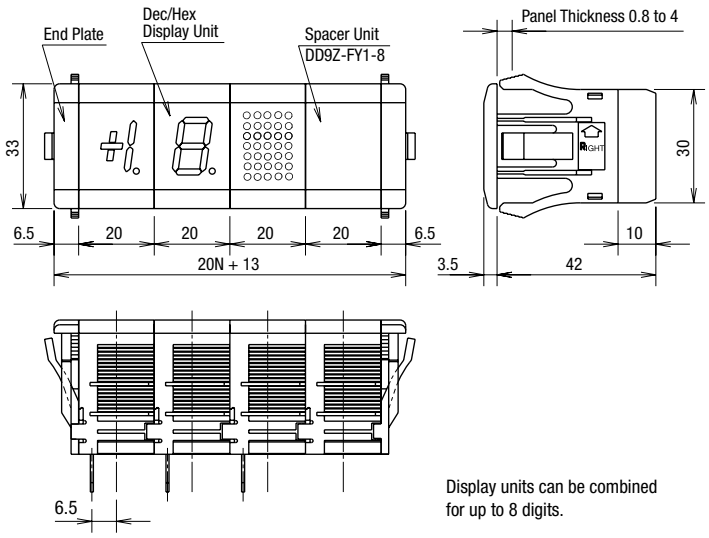

Display units can be combined for up to 8 digits.

Panel Cut-out

For Connector Wiring
For Use of Dynamic Mother Board

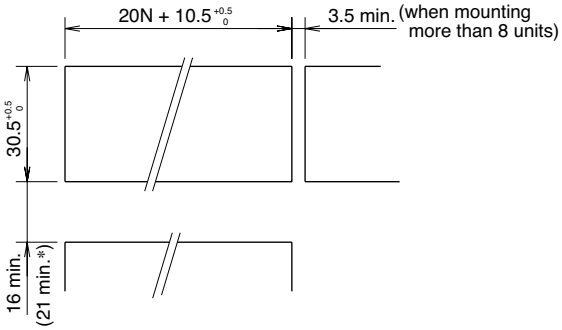

N = No. of digits (N ≤ 8)
* When using a static mother board

Accessories (Optional)

Connector

Solder Terminal Connector (DMC-1)

Applicable Wire: ø0.8mm maximum
AWG #22 maximum

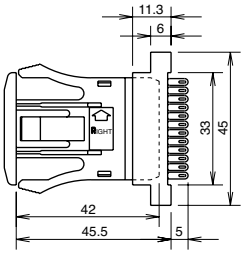

PC Board Terminal Connector (DMC-2)

Applicable PC board thickness: 1.6

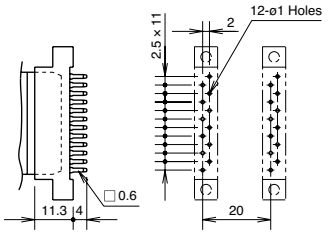

Retentive/One-way Insertion Connector (DD9Z-CN1) (Note)

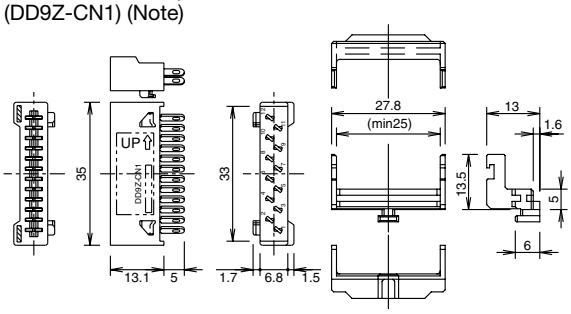

Note: Use DD9Z-CN1 in combination with DD9Z-ST1 connector stopper.

Dynamic Mother Board (not applicable to zero-suppress)

4-digit: DD9Z-MB1-4
2-digit: DD9Z-MB1-2

Substrate: Glass epoxy, 1.6-mm thick

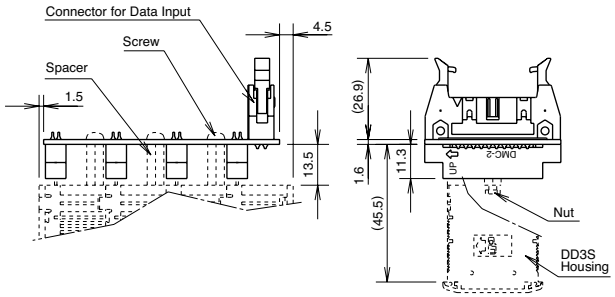

Note: The DD3S housing can be secured to the mother board using screws. Recommended tightening torque is 3.5 N·m at the maximum. When no spacer is used, the tightening torque must not exceed 2 N·m.

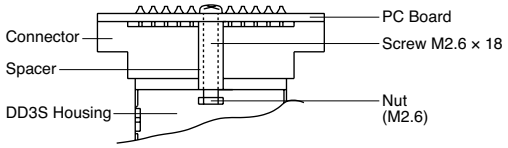

Screws (M2.6 × 18), M2.6-3 nuts, and spacers are supplied with the mother board.

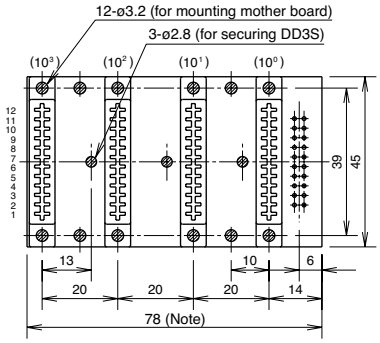

Note: 38 mm for 2-digit mother board DD9Z-MB1-2

Input Terminal Arrangement

For 4-digit (Top View)			For 2-digit (Top View)		
GND	① ②	11*	GND	① ②	11*
<+> A	③ ④	B	<+> A	③ ④	B
<1> C	⑤ ⑥	D <–>	<1> C	⑤ ⑥	D <–>
Latch (10^0)	⑦ ⑧	Latch (10^1)	Latch (10^0)	⑦ ⑧	Latch (10^1)
Latch (10^2)	⑨ ⑩	Latch (10^3)	NC	⑨ ⑩	NC
7* (10^0)	⑪ ⑫	7* (10^1)	7* (10^0)	⑪ ⑫	7* (10^1)
7* (10^2)	⑬ ⑭	7* (10^3)	NC	⑬ ⑭	NC
6*	⑮ ⑯	DP (10^0)	6*	⑮ ⑯	DP (10^0)
DP (10^1)	⑰ ⑱	DP (10^2)	DP (10^1)	⑰ ⑱	NC
DP (10^3)	⑲ ⑳	Vcc	NC	⑲ ⑳	Vcc

Numbers marked with * are the DD3S terminal numbers.

Terminal Arrangement by Models

Standard / F3**	No.
GND	12
NC	11
A	10
D	9
LAT	8
BL	7
LT	6
C	5
Vcc	4
B	3
DP	2
NC	1

Static Mother Board (not applicable to zero-suppress)

4-digit: DD9Z-MB2-4
3-digit: DD9Z-MB2-3
2-digit: DD9Z-MB2-2

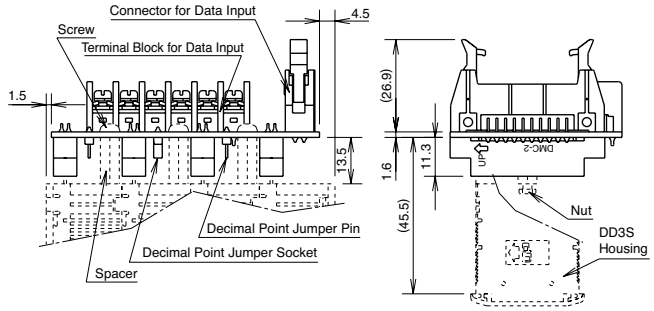

Note: The DD3S housing can be secured to the mother board using screws. Recommended tightening torque is 0.35 N·m at the maximum. When no spacer is used, the tightening torque must not exceed 0.2 N·m.

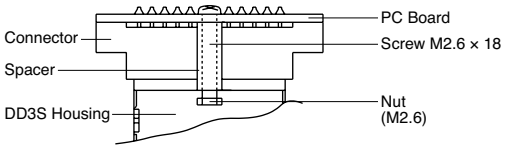

Screws (M2.6 × 18), M2.6 nuts, and spacers are supplied with the mother board.

4-digit

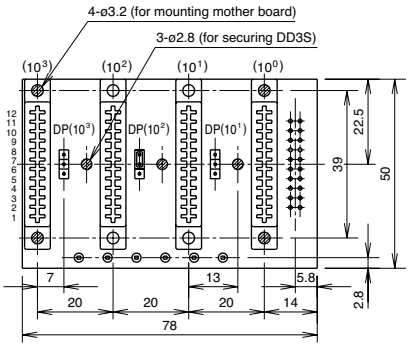

Input Terminal Arrangement

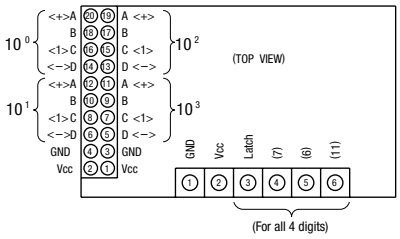

Decimal Point Jumper

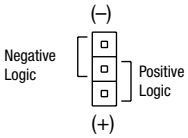

Terminal Arrangement by Models

Standard F3**	No.
GND	12
NC	11
A	10
D	9
LAT	8
BL	7
LT	6
C	5
Vcc	4
B	3
DP	2
NC	1

3-digit

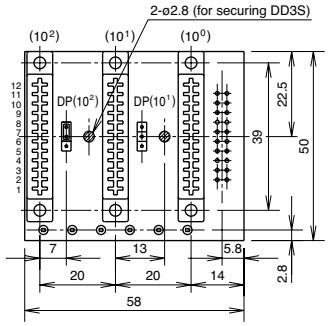

Input Terminal Arrangement

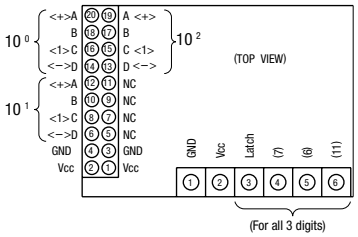

Decimal Point Jumper

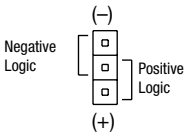

Terminal Arrangement by Models

Standard F3**	No.
GND	12
NC	11
A	10
D	9
LAT	8
BL	7
LT	6
C	5
Vcc	4
B	3
DP	2
NC	1

2-digit

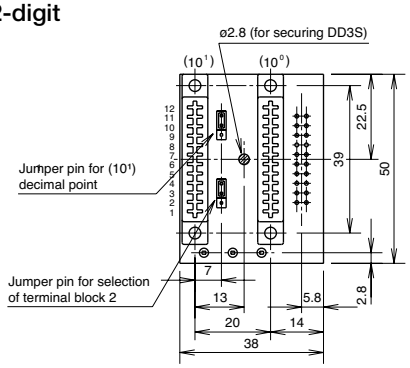

Input Terminal Arrangement

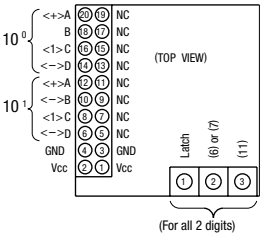

Terminal 6 or 7 Selection Jumper (Note 1)

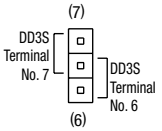

Decimal Point Jumper

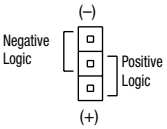

Terminal Arrangement by Models

Standard F3**	No.
GND	12
NC	11
A	10
D	9
LAT	8
BL	7
LT	6
C	5
Vcc	4
B	3
DP	2
NC	1

Note 1: For Terminal No. 2 on the mother board terminal block, select internal connection to terminal No. 6 or 7 on the DD3S using a jumper.

- Numbers shown in ( ) for the input terminals represent the DD3S terminal numbers.
- A decimal point for the 2nd and the upper digits can be turned on using a jumper. Note positive and negative logic when using a jumper.
- For terminal No. 2 on terminal block used for 2-digit, select internal connection to terminal No. 6 or 7 on DD3S using a jumper.

Coupling Spacer

For using DD3S series Display Units and the IDEC DGAN/DGBN series Digital Switches in combination, coupling spacers (two types: for right side and left side) are available.

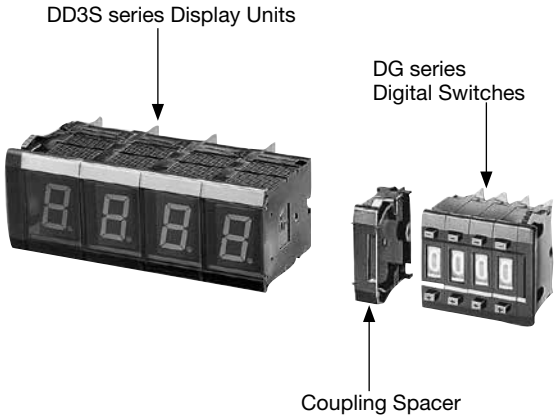

Note: The above photo shows the spacer for right side.

Coupling Spacer for Right Side (DD9Z-FG1R-B)

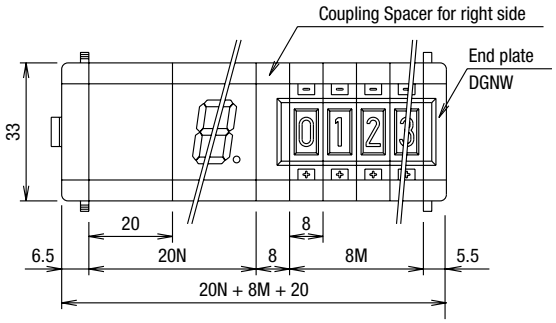

Coupling Spacer for Left Side (DD9Z-FG1L-B)

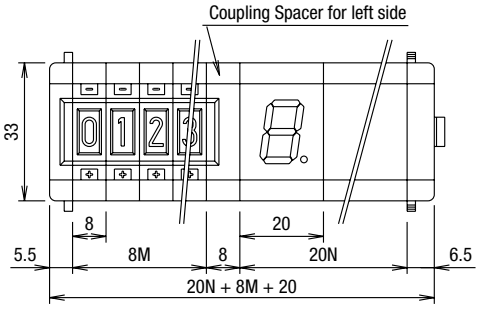

Panel Cutout

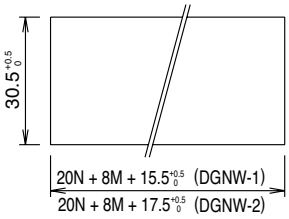

N: Number of display units mounted
M: Number of digital switches mounted (N + M ≤ 8)

Connectors for Mother Board

Two types of connectors (with cable) are available for both dynamic and static mother boards. The connector on the mother board has a strain relief to protect the insulation displacement connection from external force.

For Connection to Connector Header

DD9Z-JE1B☐

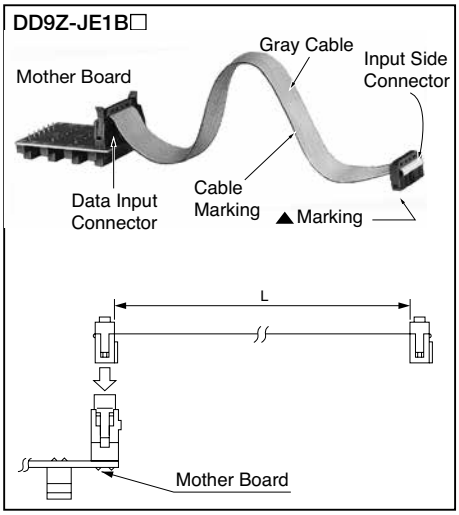

[Input Side Connector]

MIL flat cable connector (with strain relief)
IDEC's JE1S-201 (with strain relief)

Dimensions

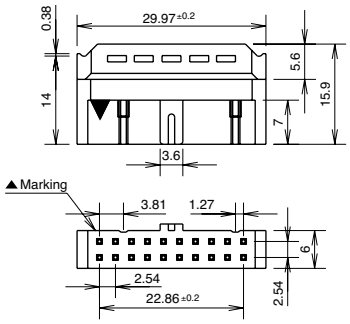

Applicable Connector Header

IDEC's JE1H-201 (Right Angle)
IDEC's JE1H-202 (Straight)

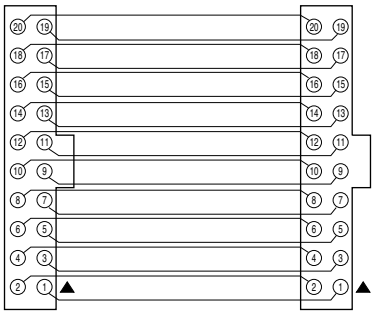

For Soldering Connection to PC Board, or Others

DD9Z-JE1C☐

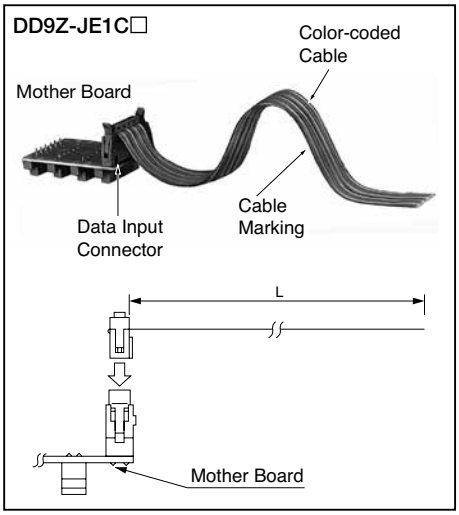

[Input Side Connector]

Not provided.

Flat Cable

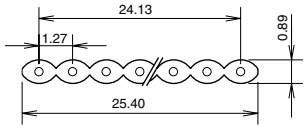

Material

Conductor	AWG28 (7 cores/0.127 mm) Tinned annealed copper wire
Insulator	Heat-resisting vinyl

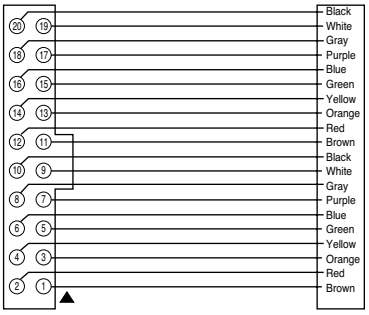

Note: Specify a cable length code in place of ☐ in the Part No.
(01: 100 mm, 02: 200 mm, 03: 300 mm, 05: 500 mm, 10: 1000 mm, 15: 1500 mm, 20: 2000 mm, 30: 3000 mm, 40: 4000 mm, 50: 5000 mm)

Wiring Diagrams

Static Mother Board Connection (2 to 4 digits)

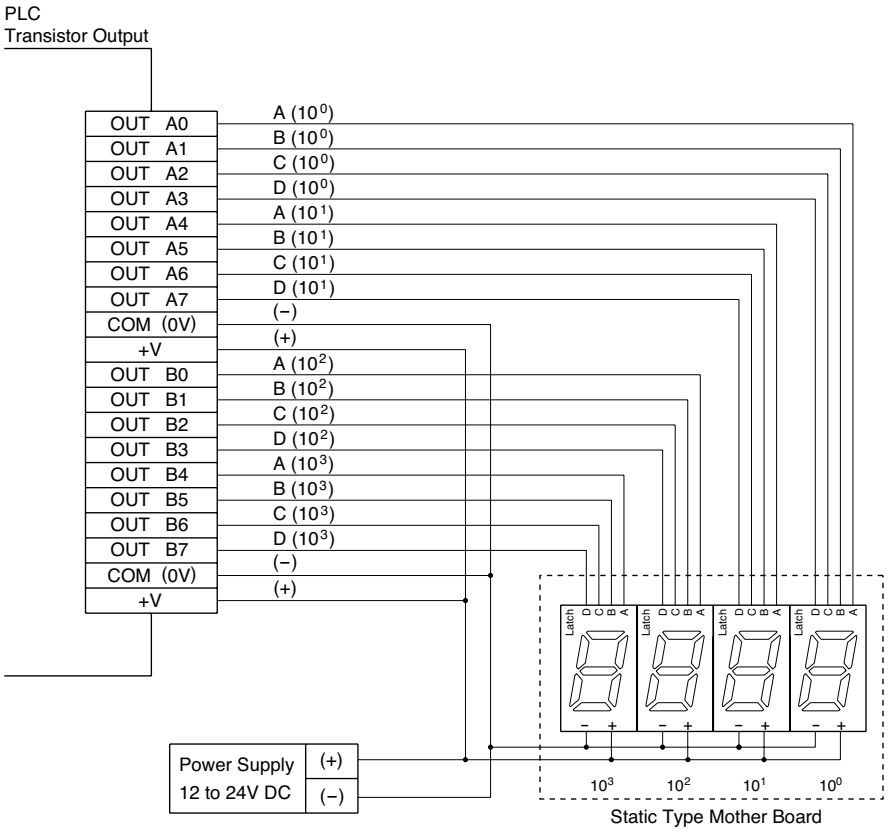

16-point Bus Connection (5 to 8 digits, multiple latch sets)

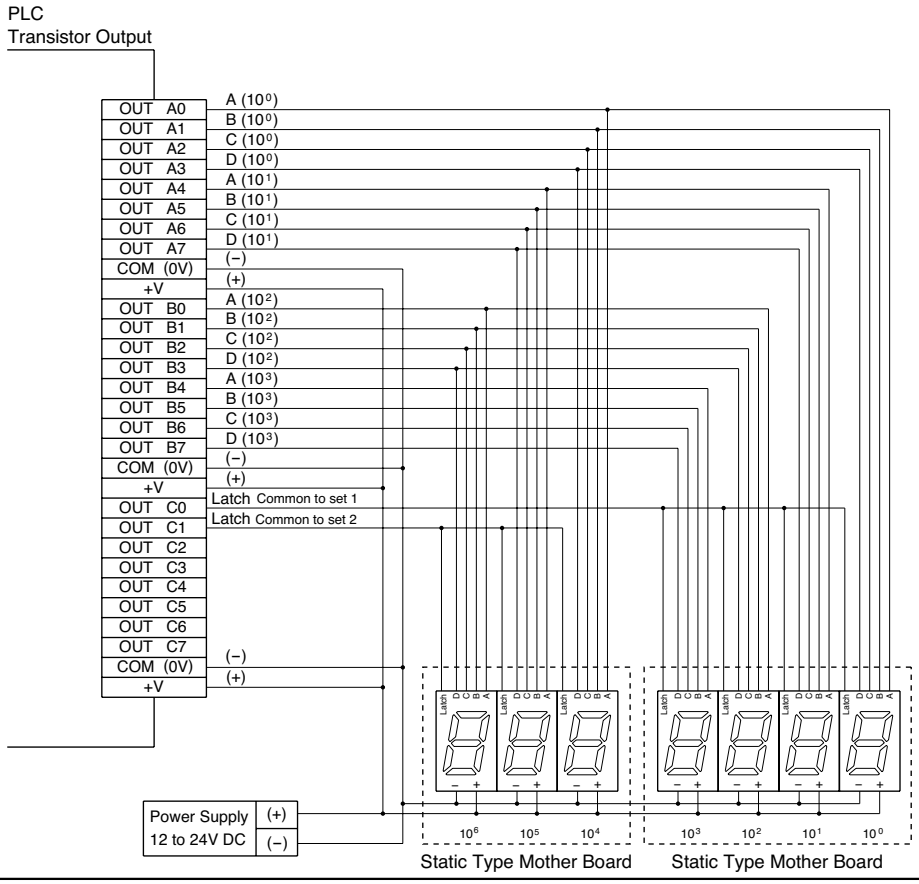

Dynamic Connection (2 to 4 digits)

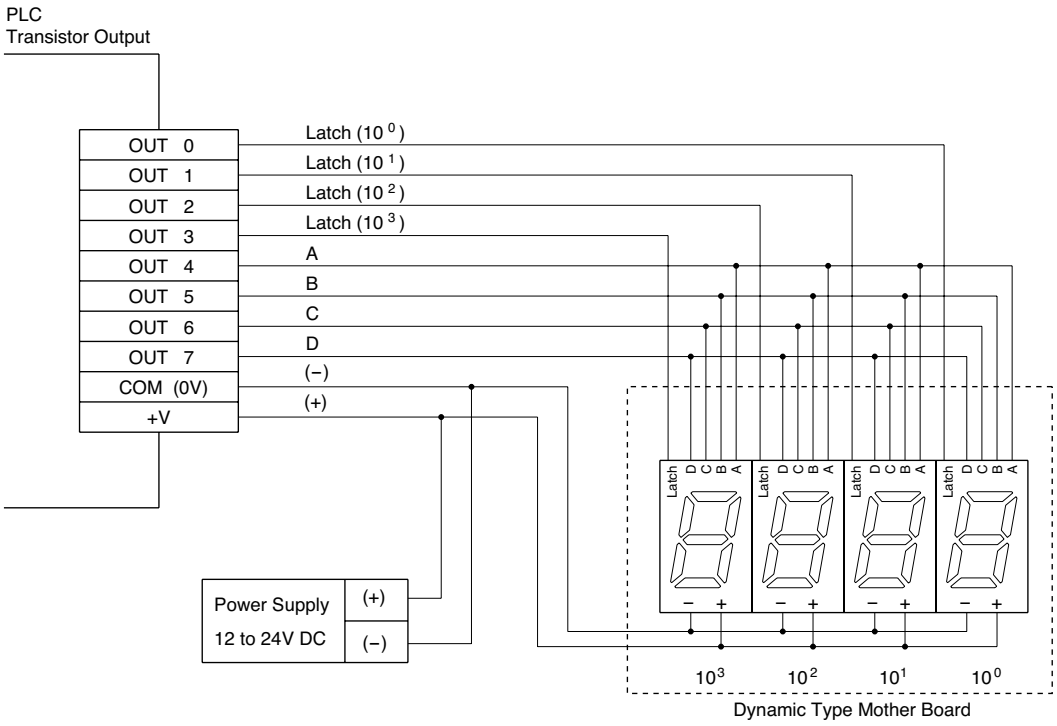

Dynamic Connection (5 to 8 digits)

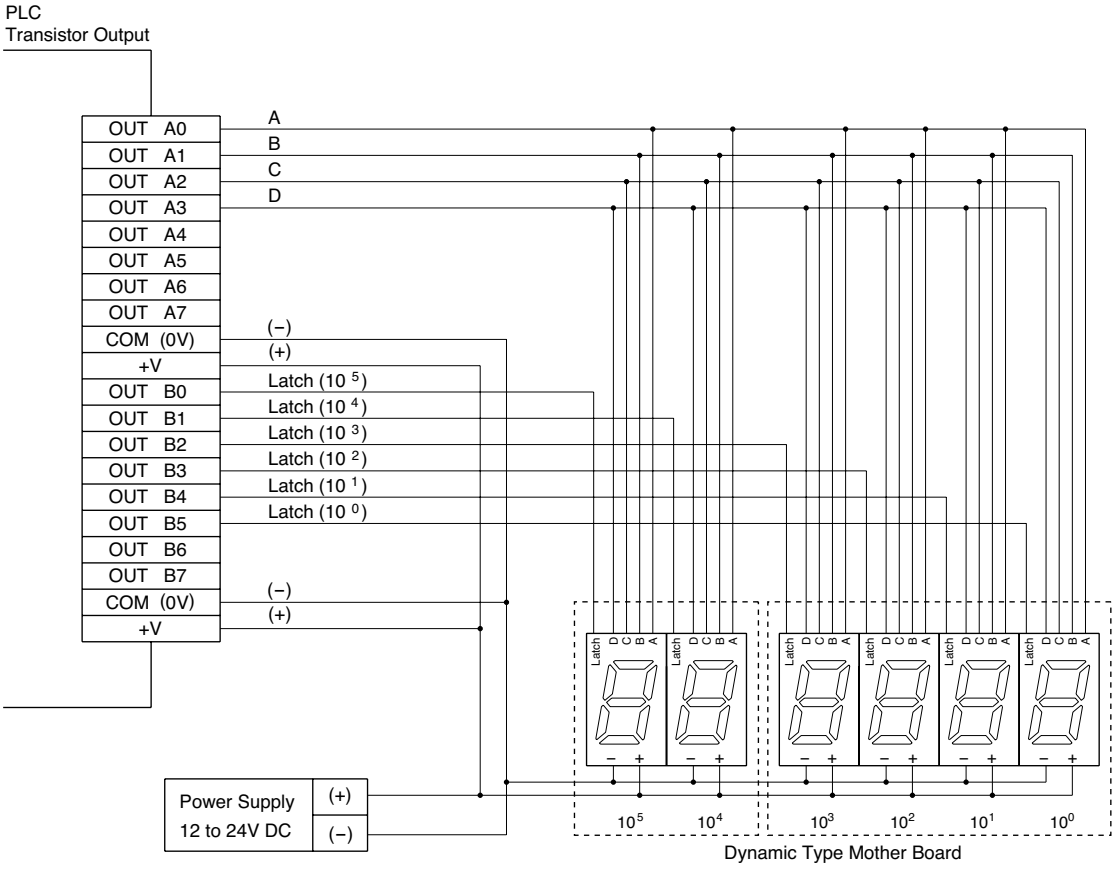

Latch Input

[Binary/Decimal/Hex/Extra Decimal Display Units]
Latch Operation (Positive Logic)

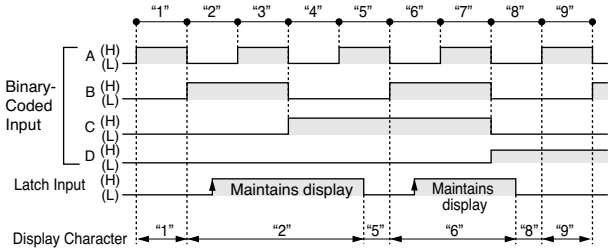

Latch Input Timing Chart

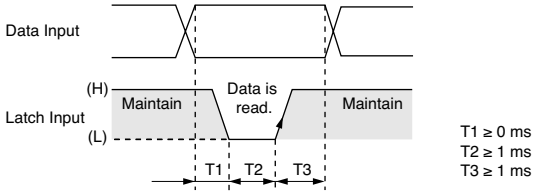

Application of Latch Function

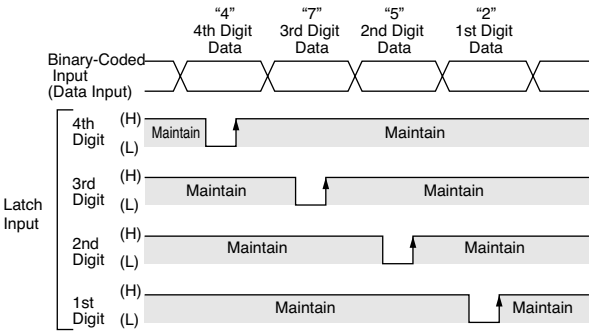

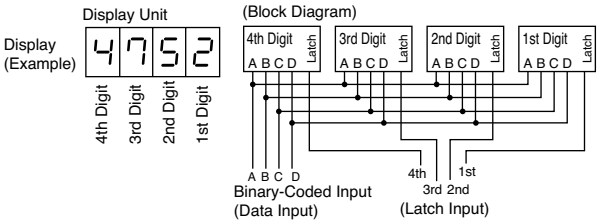

Note 1: The above chart represents positive logic units. Negative logic units have characteristics with (H) and (L) reserved.

Note 2: The rise and fall times of input pulses should be made as short as possible. (0.1 ms maximum)

Note 3: If the data input is changed in the period of T2, the display will change.

Unit Combination

Display units and end plates can be combined together by snap fit. Connection bolts and nuts are not required.

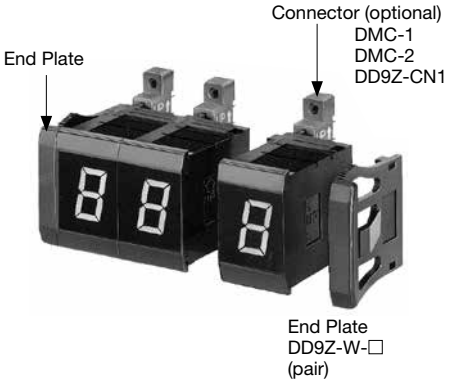

Panel Mounting

Display units can be installed into a panel cut-out by snap fit. Assemble display units and end plates together in advance. Hold the assembly at the end plates and push it into a panel cut-out.

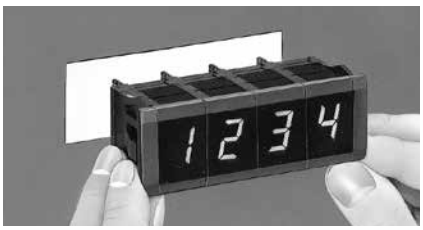

Mother Board (for 4-digit display)

The mother board is intended for 4-digit display and must be connected to four display units at once. Therefore, mount or dismount the mother board properly according to the procedure below.

[Installation]
Put the substrates of four display units into the connectors on the mother board. Insert the substrates into the connectors, pushing the display units on upper and lower sides alternately.
Note: Be sure to insert four display units at once.

[Removal]
Remove the display units, pulling the upper and lower sides alternately. Be sure to remove all the four units at the same time.

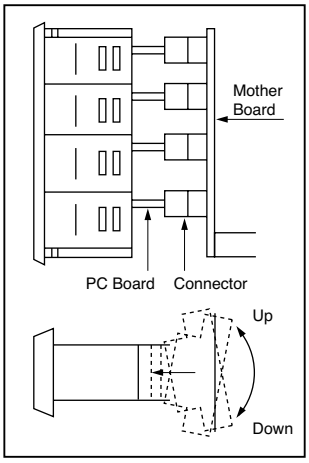

CAUTION:
Never insert or remove the display units one by one as shown. The substrate may be damaged.

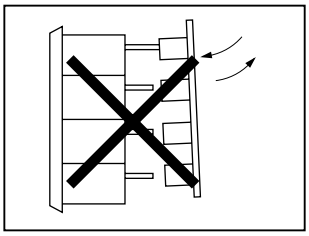

Note: For installation of the mother board for 2-digit and 3-digit display, perform the same procedure.

Instructions

1. When cleaning the surface of the filter and housing, use a soft cloth. Do not use thinner or acid to clean the surface.
2. When the display unit is mounted in a panel cut-out, do not place a metal object or power line within 40 mm from the end of the connector terminals (or PC board terminals) at the rear of the display unit.
3. If the display units are subjected to voltage surges, install a surge suppressor in the power line.
4. Use shielded cable or metal conduit for the input line. Run the input wiring as far away as possible from high-voltage and motor lines. Make the input line as short as possible.
5. When using display units in environments where a large amount of electrostatic noise is generated, such as where molding materials, powders, or fluids are transferred through pipe lines, keep the display units as far away as possible from electrostatic sources.
6. Avoid using the display unit in a place where excessive and frequent vibration or impact may occur.
7. Avoid using the display unit in a place where it is exposed to corrosive gas, water or oil splashes, dust or direct sunlight, or in a place where organic solvents are used.
8. The filter is made of polycarbonate. Make sure that machine oil does not touch the filter.
9. If the Latch input is on when the DD3S is powered up, the data input cannot be read correctly or wrong data may be maintained. Do not turn on the Latch input for 0.5 sec after the DD3S is powered up.
10. When connecting a pull-up or pull-down resistor to the input terminals, ensure compatibility with the input resistor of the DD3S internal circuit.
11. When the DD3S is powered up, an inrush current of 2A (10 ms maximum) flows through the internal power supply circuit. Select an external power supply of sufficient capacity, taking this inrush current into consideration.
12. Solder the terminal at 350°C within 3 seconds using a 60W soldering iron. Sn-Ag-Cu is recommended when using lead-free solder. When soldering, do not touch the control unit with the soldering iron. Also ensure that no tensile force is applied to the terminal. Do not bend the terminal or apply excessive force to the terminal. Use a non-corrosive rosin flux.

DD48 Series Display Units

Modular units can be combined for up to 16 digits.

- Super bright LED
- Units can be combined together and installed into a panel cut-out by snap fit.
- Binary and decimal display units are available.
- Easy wiring and maintenance
- LED display color: red or green
- Decimal display units are available with zero suppression function.
- Available in positive and negative input logic types.

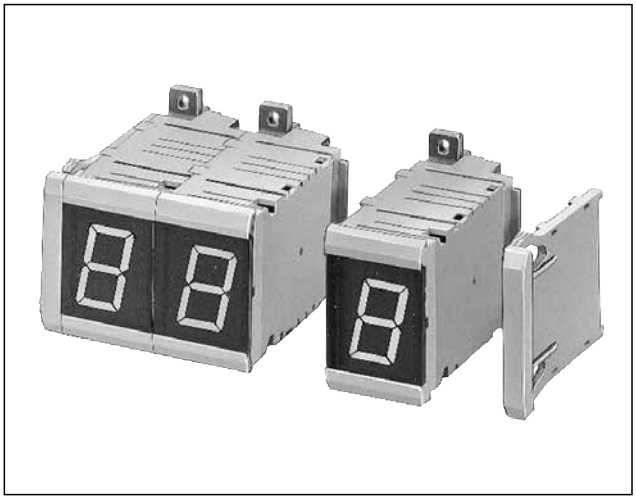

DD48

Unit	Input Logic	Housing Color	Part No.
Binary Display	Positive	Black	**DD48-F01PB ∗ DC24**
		Beige	**DD48-F01PZ ∗ DC24**
	Negative	Black	**DD48-F01NB ∗ DC24**
		Beige	**DD48-F01NZ ∗ DC24**
Decimal Display	Positive	Black	**DD48-F31PB ∗ DC24**
		Beige	**DD48-F31PZ ∗ DC24**
	Negative	Black	**DD48-F31NB ∗ DC24**
		Beige	**DD48-F31NZ ∗ DC24**

Note: Specify the LED color code in place of ∗ in the Part No.
MR: red, R: red (super bright), G: green

Accessories (Optional)

Name		Part No.
Spacer Unit	Black	**DD48-FY1-B**
End Plate (Pair)	Black	**DD48-W-B**
	Beige	**DD48-W-Z**
Mounting Clip (Note 1)	Black	**DD48-KT1**
Long Filter	For red LED	**DD48-P16R**
	For green LED	**DD48-P16G**
Connector	Solder Terminal	**DMC-4**
Connector for Mother Board	Type A	**DD48-JE1A☐** (Note 2)
	Type B	**DD48-JE1B☐** (Note 2)
	Type C	**DD48-JE1C☐** (Note 2)

Note 1: Used for mounting four units or more.
Note 2: Specify a cable length code in place of ☐ in the Part No., referring to the table below.

Cable Length Code for Mother Board

Code	0.5	1	2	3	4	5
Cable Length (mm)	500	1000	2000	3000	4000	5000

Note: Input connector types
DD48-JE1B☐: Flat cable connector conforming to MIL Standard
DD48-JE1C☐: None (soldering, etc)

Specifications

Power Voltage	24V DC ±10%
Power Consumption (Approx.)	Binary: 0.9W Decimal: 2.0W
Operating Temperature	–10 to +55°C (no freezing)
Storage Temperature	–25 to +80°C (no freezing)
Operating Humidity	35 to 85% RH (no condensation)
Data Input	L: 0 to 2V H: 12 to 30V
Display Character	• Binary display unit red or green LED display: – • Decimal display unit 7-segment red or green LED: 0 to 9, decimal point
Character Height (Approx.)	• Binary display unit: 2.5 mm • Decimal display unit: 25.4 mm
Input	• Binary display unit: –, Latch, and Blank inputs • Decimal display unit: Binary-coded, Latch, DP, and RBI inputs
Output	• Decimal display unit: RBO output
Input Logic	Positive or negative
No. of Digits	16 digits max.
Unit Combination	Snap fit
Panel Mounting	Snap fit
Degree of Protection	IP40 (IEC 60529)
Weight (Approx.)	Display unit: 50g End plates: 20g (pair)

Note: It is recommended to use a long filter when combining 9 to 16 digits.

Terminal Connection

	Connection Diagram	Terminal Arrangement	Internal Input Circuit
Binary Display Unit	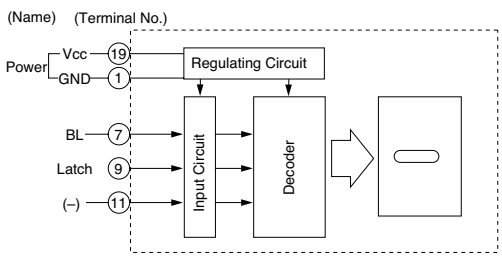	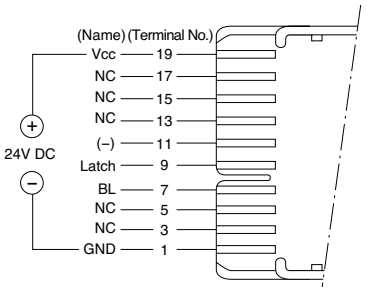	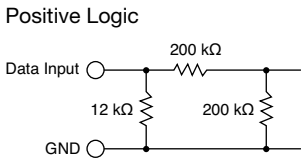
Decimal Display Unit	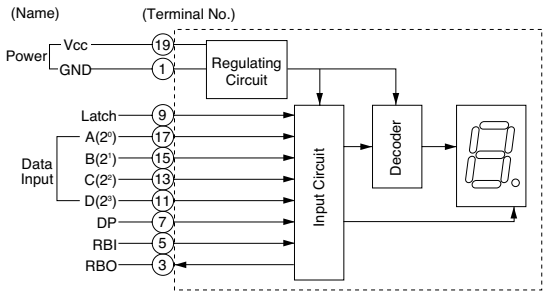	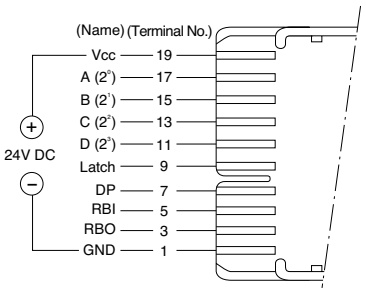	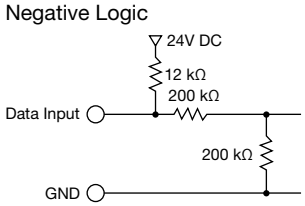

External Wiring

Positive Logic

[Contact Input (Digital Switch)] [Transistor Input]

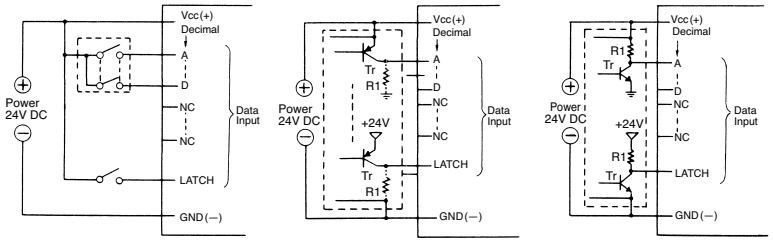

When Tr is on, output goes to H.

When Tr is off, output goes to H.

Connector Terminal No.

(Binary/Decimal Display Unit Compatible)

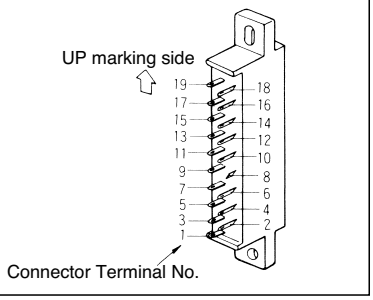

Negative Logic

[Contact Input (Digital Switch)] [Transistor Input]

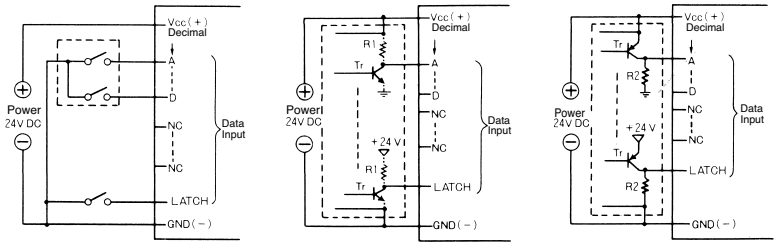

When Tr is on, output goes to L.

When Tr is off, output goes to L.

Note: When connecting pull-up or pull-down resistors to the external circuit, refer to the following table.

External Power Supply	Type	R1	R2
24V DC	Binary/ Decimal	2.2 kΩ to 8.2 kΩ (1/2W) (1/4W)	1 kΩ (1W)

Function Table

Binary Display Unit

Data Input (H, L: Voltage Level)						LED Display
Positive Logic			Negative Logic			
—	Latch	BL	—	Latch	BL	
L	L	H	H	H	L	blank
H	L	H	L	H	L	—
×	H	H	×	L	L	maintain
×	×	L	×	×	H	blank

Input Functions

– Input

Blank or – display is selected.

Latch Input

When the Latch input is set to level H for the positive logic or level L for the negative logic, the display at the time is maintained.

BL (Blank) Input

When the BL input is set to level L for the positive logic or level H for the negative logic, the display is blanked regardless of other inputs.

Decimal Display Unit

Data Input (H, L: Voltage Level)																LED
Positive Logic								Negative Logic								Decimal Display Unit
D	C	B	A	LATCH	DP	RBI	RBO	D	C	B	A	LATCH	DP	RBI	RBO	
L	L	L	L	L	H	H	*	H	H	H	H	H	L	H	*	0.
H	L	H	L	L	H	L	*	L	H	L	H	H	L	L	*	.
H	L	H	H	L	H	L	*	L	H	L	L	H	L	L	*	.
H	H	L	L	L	H	L	*	L	L	H	H	H	L	L	*	.
H	H	L	H	L	H	L	*	L	L	H	L	H	L	L	*	.
H	H	H	L	L	H	L	*	L	L	L	H	H	L	L	*	.
H	H	H	H	L	H	L	*	L	L	L	L	H	L	L	*	.
L	L	L	L	L	L	L	L	H	H	H	H	H	H	L	L	blank
L	L	L	L	L	L	H	*	H	H	H	H	H	H	H	*	0
L	L	L	H	L	L	×	Δ	H	H	H	L	H	H	×	Δ	1
L	L	H	L	L	L	×	Δ	H	H	L	H	H	H	×	Δ	2
L	L	H	H	L	L	×	Δ	H	H	L	L	H	H	×	Δ	3
L	H	L	L	L	L	×	Δ	H	L	H	H	H	H	×	Δ	4
L	H	L	H	L	L	×	Δ	H	L	H	L	H	H	×	Δ	5
L	H	H	L	L	L	×	Δ	H	L	L	H	H	H	×	Δ	6
L	H	H	H	L	L	×	Δ	H	L	L	L	H	H	×	Δ	7
H	L	L	L	L	L	×	Δ	L	H	H	H	H	H	×	Δ	8
H	L	L	H	L	L	×	Δ	L	H	H	L	H	H	×	Δ	9
H	L	H	L	L	L	×	Δ	L	H	L	H	H	H	×	Δ	blank
H	L	H	H	L	L	×	Δ	L	H	L	L	H	H	×	Δ	blank
H	H	L	L	L	L	×	Δ	L	L	H	H	H	H	×	Δ	blank
H	H	L	H	L	L	×	Δ	L	L	H	L	H	H	×	Δ	blank
H	H	H	L	L	L	×	Δ	L	L	L	H	H	H	×	Δ	blank
H	H	H	H	L	L	×	Δ	L	L	L	L	H	H	×	Δ	blank
×	×	×	×	×	L	×	Δ	×	×	×	×	L	H	×	Δ	maintain

Input and Output Functions

A, B, C and D (binary code) Input

Decimal data input corresponding to each code of 1, 2, 4 or 8

Latch Input

When the Latch input is set to level H for the positive logic or level L for the negative logic, the display at the time is maintained. (DP input is independent.)

DP (Decimal Point) Input

When DP input is set to level H for the positive logic or level L for the negative logic, the decimal point turns on.

RBI Input

When the RBI input is set to level L with 0 displayed, the display is blanked.

RBO Output

The RBO output goes to level L during zero blanking. Leading zeros can be suppressed by connecting the RBO to the RBI on the lower digits.

- Display is not affected whether × is in level H or L.
- * marking indicates high impedance.
- Δ marking is in level L or high impedance depending on RBI input.
- RBO output is open collector output.

Application Example of RBI and RBO

[Ex. 1] Leading zeros are also displayed. RBI inputs and RBO outputs are disconnected.

[Ex. 2] Leading zeros on the upper three digits are suppressed. When the data on the 1st digit on the lower digit is zero, 0 is displayed.

[Ex. 3] Zero in the 4th digit is suppressed. Zero and decimal point are displayed on the 3rd digit.

[Ex. 4] Trailing zeros in the 2nd and 1st digits are suppressed. When the data on the 1st to 4th digits are zero, and the decimal point on the 4th digit is on, 0.0 is displayed.

Note: Use the RBO output only for connection to the RBI input. Do not use the RBO for other purposes.

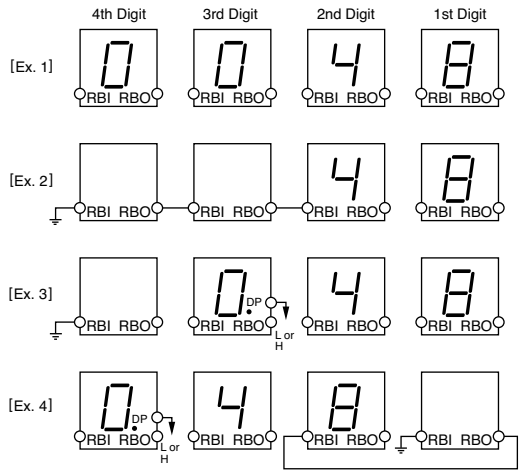

Dimensions & Panel Cut-out

All dimensions in mm.

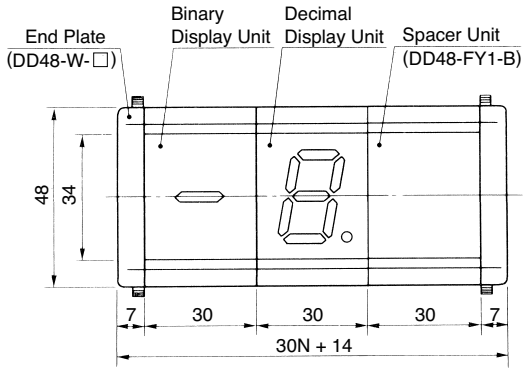

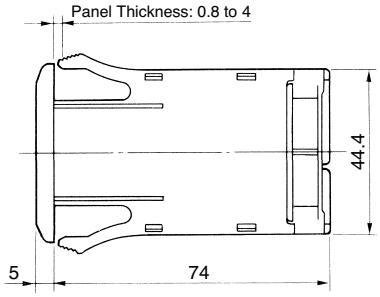

Display units can be combined for up to 16 digits.
When combining 9 to 16 digits, it is recommended to use the long filter.

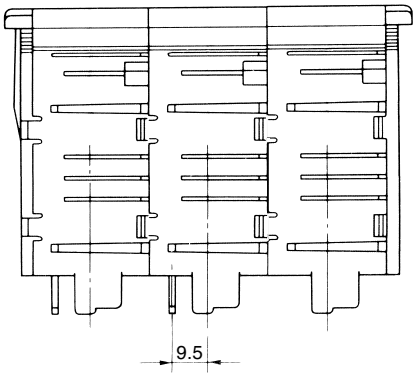

(Panel Cut-out)

Note: When mounting more than 16 units

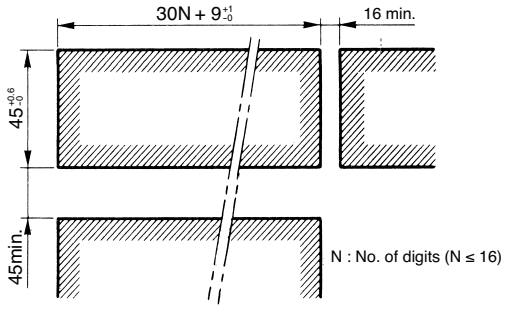

Note: The panel cut-out width shown above is the minimum length required. When mounting many display units, determine the panel cut-out width to fit the actual size.

Accessories (Optional)

Spacer

DD48-FY1-B (black)

Weight (approx.) 22g

Characters can be engraved on the filter. Used for adjusting the number of units.
Mounting Method: Same as display units. Refer to Unit Combination on page 21.

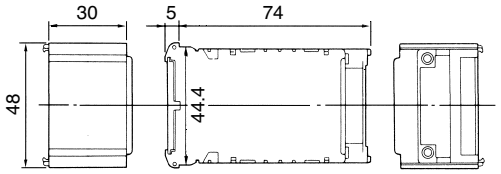

End Plate

DD48-W-☐ (B: black, Z: beige)

Weight (approx.) 20g (pair)

End plates must be installed at both ends of the assembly of the display units.
Mounting Method: Refer to Unit Combination on page 21.

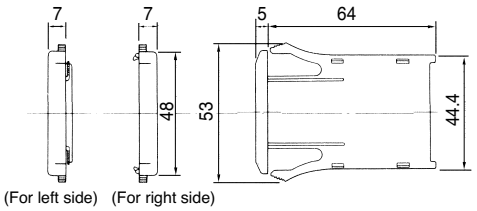

Mounting Clip

DD48-KT1 (black)

Weight (approx.) 7g

Used to fasten the display units to the panel when mounting four units or more.
Mounting Method: Refer to Panel Mounting on page 21.

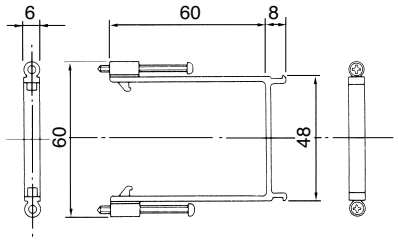

All dimension in mm.

Long Filter

DD48-P16-☐ (R: red, G: green)

Weight (approx.) 20g

Eliminates the visual separation between units to improve the display face appearance.
For mounting method, refer to How to Use Long Filter on page 21.

Required Length (mm) = $30N + 3^{+1}_{-0}$
(N: No. of units)
Cut the long filter to the required length.

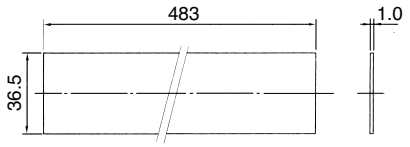

Connector

DMC-4
(Solder Terminal)

Weight (approx.) 9g

Solder Terminal Connector

Applicable Wire: Solid ø0.8 maximum
Stranded AWG22 maximum

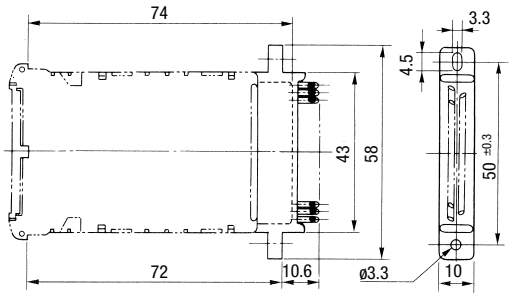

Connector for Mother Board

Two types of connectors (with cable) are available for the mother board. The connector on the mother board has a strain relief to protect the insulation displacement connection from external force.

For Connection to Connector Header

DD48-JE1B☐

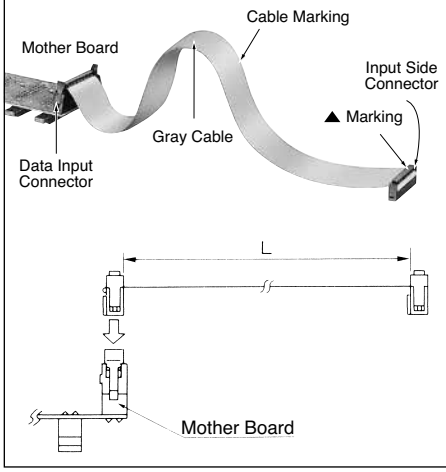

[Input Side Connector]

MIL flat cable connector (with strain relief)
IDEC's JE1S-301 (with strain relief)

Dimensions

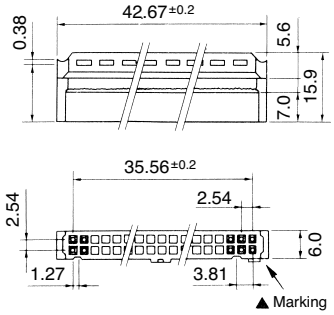

<Applicable Connector Header>
IDEC's JE1H-301 (Right Angle)
IDEC's JE1H-302 (Straight)

Terminal Arrangement (Bottom View)

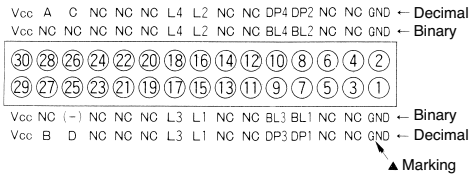

For Soldering Connection to PC Board or Others

DD48-JE1C☐

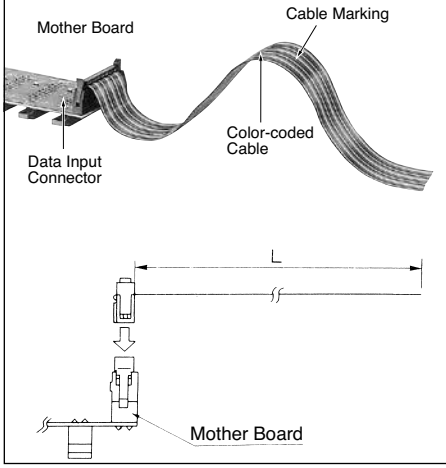

[Input Side Connector]

Not provided (soldering, etc.)

Flat Cable

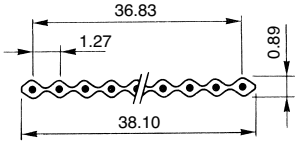

Material

Conductor	AWG28 (7 cores/0.127mm) Tinned annealed copper wire
Insulator	Heat-resisting vinyl

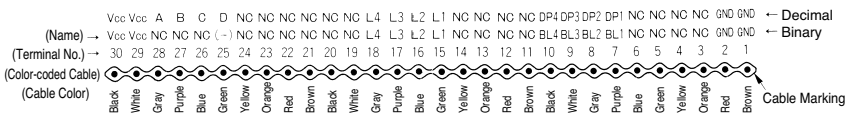

Note: Specify a cable length code (0.5: 500 mm, 1: 1000 mm, 2: 2000 mm, 3: 3000 mm, 4: 4000 mm, 5: 5000 mm) in place of ☐ in the Part No.

Installation

Unit Combination

Display units and end plates can be combined together by snap fit. Connection bolts and nuts are not required.

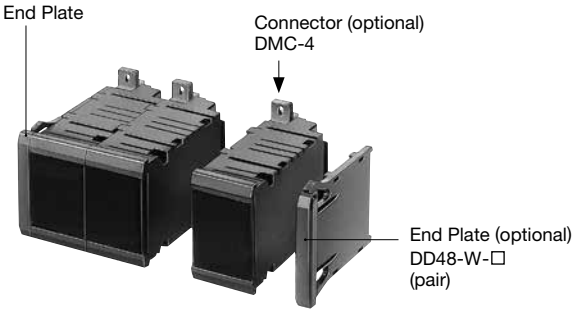

How to Use Long Filter

When using the long filter, refer to the following procedure.

1. Remove the single-digit filter from every display unit, sliding the filter to the right as shown below.

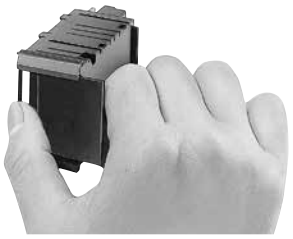

2. Combine the left end plate and a required number of display units. Then insert the long filter from right side into the groove of the display units and set the right end plate.

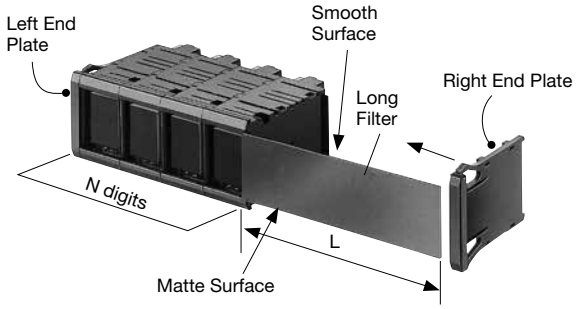

Note 1: The length of the long filter is for 16 digits. Cut the filter to the required length.
Required Length L (mm) = $30N + 3^{+1}_{0}$
$1 \leq N \leq 16$ (N: No. of digits)

Note 2: When using a long filter, use display units of the same LED color.

Panel Mounting

Display units can be installed into a panel cut-out by snap fit. Assemble display units and end plates together in advance and hold the assembly at the end plates and push into a panel cut-out.

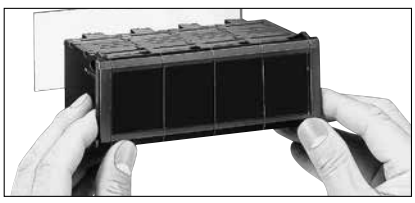

Installation of Mounting Clip

When mounting more than 4-digits, install mounting clips from the behind and tighten them. Refer to the following figures for the number of clips and the mounting positions.

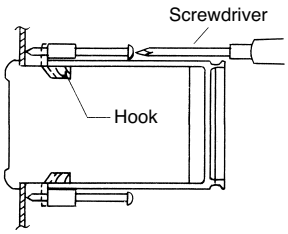

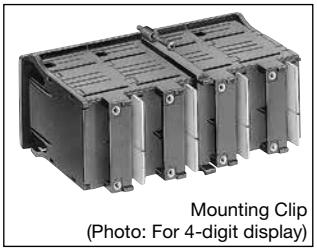
Mounting Clip
(Photo: For 4-digit display)

Install the mounting clip to the display unit as illustrated above, and tighten the screw lightly.
Tightening Torque: Approx. 0.15 N·m

[Mounting Position] Rear View

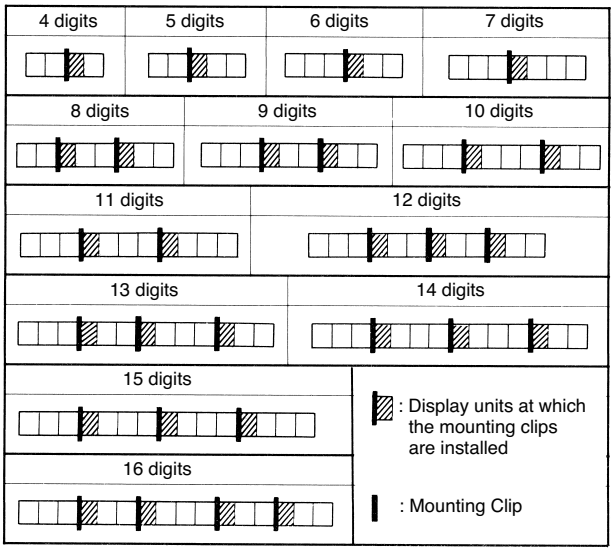

Mother Board

The mother board is for mounting four display units. Four display units should be connected to the mother board at the same time. Follow the procedure as below for installation and removal.

[Installation]
Put the substrates of four display units into the four connectors on the mother board. Insert the substrates into the connectors, pushing the display units on upper and lower sides alternately.
Note: Be sure to insert four display units at once.

[Removal]
Remove the display units, pulling upper and lower sides alternately. Be sure to remove the four units at the same time.

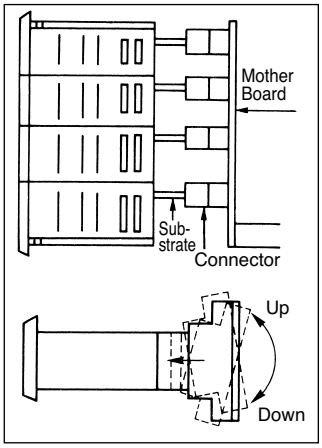

Never insert or remove the display units one by one as shown. (The substrate may be damaged.)

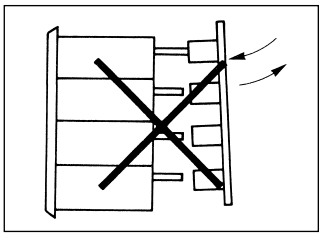

Latch Input

Latch Operation

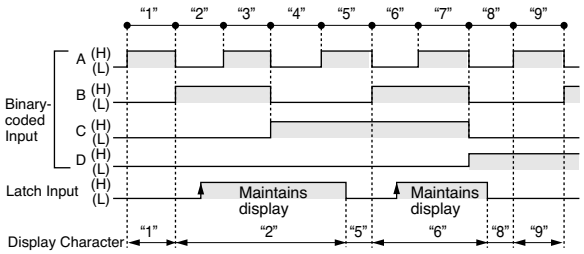

Latch Input Timing Chart

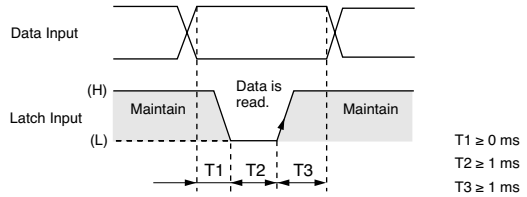

Note 1: The above chart represents positive logic units. Negative logic units have characteristics with (H) and (L) reversed.

Note 2: The rise and fall times of input pulses should be made as short as possible. (0.1 ms maximum)

Note 3: If the data input is changed in the period of T2, the display will change.

Application of Latch Function

Note: The following chart represents positive logic digital display units. Negative logic units have characteristics with (H) and (L) reversed.

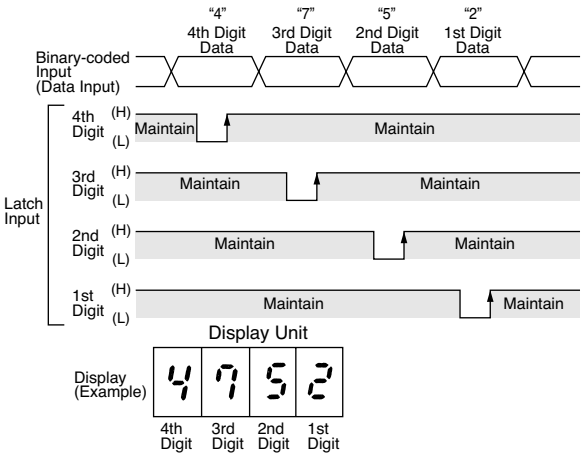

Block Diagram

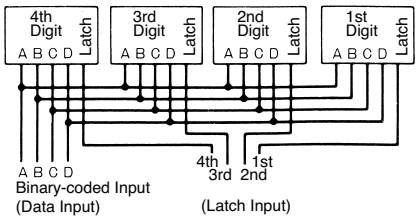

Instructions

1. When cleaning the surface of the filter and housing, use a soft cloth. Do not use thinner or acid to clean the surface.
2. When the display unit is mounted in a panel cut-out, do not place a metal object or power line within 40 mm from the end of the connector terminals (or PC board terminals) at the rear of the display unit.
3. If the display units are subjected to voltage surges, install a surge suppressor in the power line.
4. Use a shielded cable or metal conduit for the input line. Run the input wiring as far away as possible from high-voltage and motor lines. Make the input line as short as possible.
5. When using display units in environments where a large amount of electrostatic noise is generated, such as where molding materials, powders, or fluids are transferred through pipe lines, keep the display units as far away as possible from electrostatic sources.
6. Avoid using the display unit in a place where excessive and frequent vibration or impact may occur.
7. Avoid using the display unit in a place where it is exposed to corrosive gas, water or oil splashes, dust or direct sunlight, or in a place where organic solvents are used.
8. The filter is made of acrylic.
9. If the Latch input is on when the DD48 is powered up, the data input cannot be read correctly or wrong data may be maintained. Do not turn on the Latch input until at last 0.5 sec after the DD48 is powered up.
10. When the DD48-F01 is powered up, an inrush current of 0.5A (10 ms maximum) and when the DD48-F31 is powered up, an inrush current of 0.5A (10 ms maximum) flows through the internal power supply circuit. Select an external power supply of sufficient capacity, taking inrush current into consideration.
11. When connecting a pull-up or pull-down resistor to the input terminals, ensure compatibility with the input resistor in the DD48 internal circuit.

DD96 Series Display Units

Two mounting styles; front and rear mount.
High visible large LEDs;
character height 57 mm.

- Modular units can be combined for up to 8-digits.
- Super bright LED
- Units can be combined together and installed into a panel cut-out by snap fit.
- Easy wiring and maintenance
- Display units operate on 24V DC.
- Jumbo size model of 96H × 72W mm (character height 57 mm), high visible from a distance.

DD96

Item		Input Logic	Housing Color	Part No.
Front Mount	Decimal Display Unit	Negative	Black	**DD96-F31N-B**
	End Plate (pair)		Black	**DD96-W-B**
Rear Mount	Decimal Display Unit	Negative	Black	**DD96-R31N-B**

Note: A connector is supplied with each display unit.

Specifications

Power Voltage	24V DC ±10%
Current Draw	Approx. 80 mA
Operating Temperature	–10 to +55°C (no freezing)
Storage Temperature	–25 to +80°C (no freezing)
Operating Humidity	35 to 85% RH (no condensation)
Data Input	L: 0 to 2V H: 12 to 30V
Display Character	7-segment red LED display Decimal display unit: 0 to 9, decimal point
Character Height	57 mm
Input	Binary-coded, Latch, DP and BI inputs
Input Logic	Negative
Output	BO (blanking output)
No. of Digits	8 digits max.
Panel Mounting	Front mount: Snap fit Rear mount: Screw
Degree of Protection	IP40 (IEC 60529)
Weight (Approx.)	Front mount: 130g End plates: 26g (pair)
	Rear mount: 100g

Terminal Connection

Connection Diagram

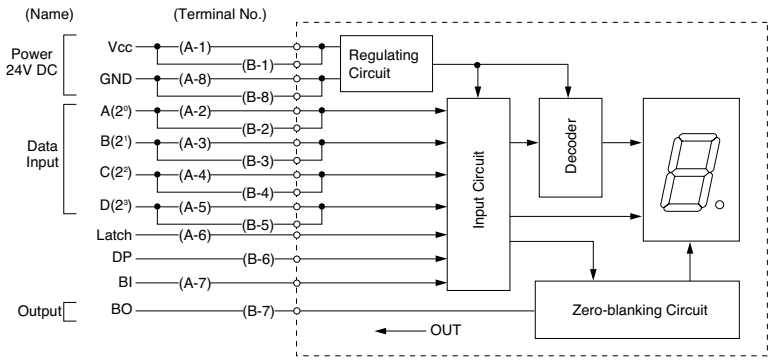

Internal Input Circuit

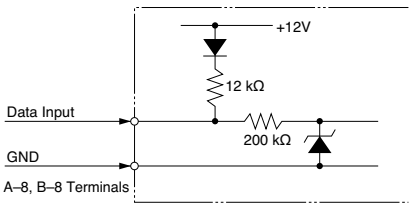

Terminal Arrangement (Connector) Bottom View

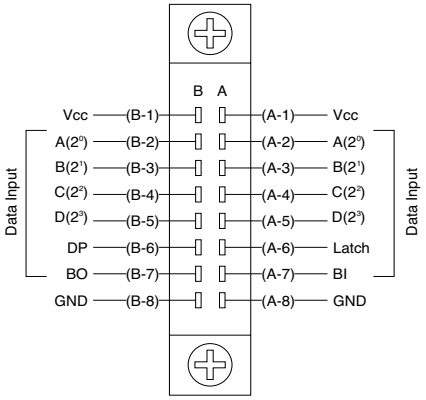

Note: Since power supply terminals and terminals A(2⁰), B(2¹), C(2²) and D(2³) on sides A and B are internally connected to each other, connection is sufficient to only one side, but use terminals on the same side for jumper wiring.

Applicable Wire: Solid ø0.6 maximum
Stranded AWG28 to 30

External Wiring

[Contact Input (Digital Switch)]

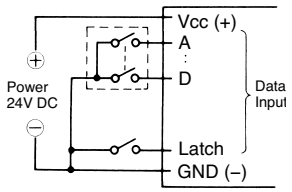

[Transistor Input]

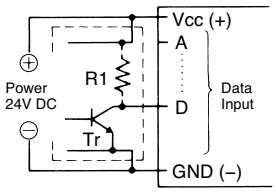

When Tr is on, output goes to L.

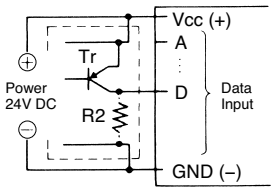

When Tr is off, output goes to L.

Note: When connecting a pull-up or pull-down resistor to the external circuit, R1 and R2 should be 2.2 to 10 kΩ (1/2 to 1/4W) and 1 to 2.2 kΩ (1 to 1/2W), respectively.

Function Table

Data Input							LED Display	Output
Negative Logic Type							Decimal Display Unit	BO
D	C	B	A	Latch	DP	BI		
H	H	H	H	H	H	H	blank	H
H	H	H	H	H	H	L	0	L
H	H	H	L	H	H	△	1	L
H	H	L	H	H	H	△	2	L
H	H	L	L	H	H	△	3	L
H	L	H	H	H	H	△	4	L
H	L	H	L	H	H	△	5	L
H	L	L	H	H	H	△	6	L
H	L	L	L	H	H	△	7	L
L	H	H	H	H	H	△	8	L
L	H	H	L	H	H	△	9	L
L	H	L	H	H	H	△	blank	L
L	H	L	L	H	H	△	blank	L
L	L	H	H	H	H	△	blank	L
L	L	H	L	H	H	△	blank	L
L	L	L	H	H	H	△	blank	L
L	L	L	L	H	H	△	blank	L
×	×	×	×	L	H	△	maintain	

Input and Output Function

A, B, C, and D (binary code) Input

A, B, C and D are binary-coded decimal inputs corresponding to 1, 2, 4 or 8.

Latch Input

When the Latch input is set to level L, the display at the time is maintained. (DP and BI inputs are independent.)

DP (Decimal Point)

When the DP input is set to level L, the decimal point turns on.

BI (Zero Blanking Input)

When the BI input is set to level H with 0 displayed, the display is blanked.

BO (Blanking Output)

The BO output goes to level H during zero blanking. Leading zeros can be suppressed by connecting the BO to the BI on the lower digits.

Note:
× indicates the display after inputting the Latch signal is maintained regardless of the voltage level of H or L.
△ indicates the display is not affected by voltage level of H or L.
DP (decimal point) turns on when the DP input signal is in level L.

Dimensions & Panel Cut-out

Front Mount

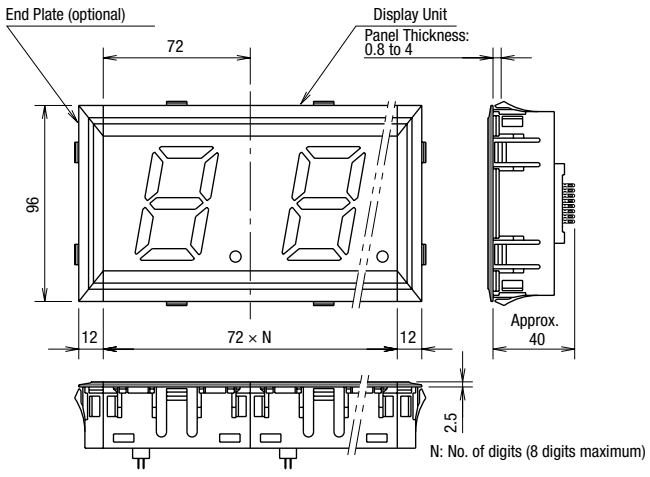

Rear Mount

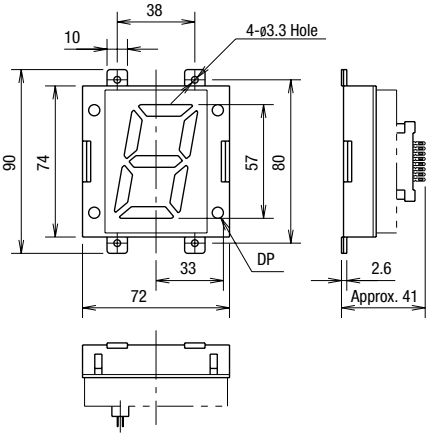

(Panel Cut-out)

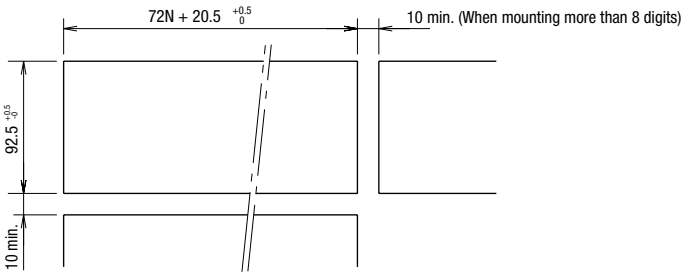

All dimensions in mm.

Instructions

Unit Combination

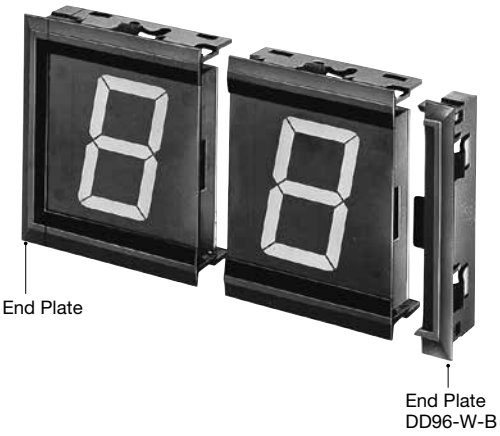

Only end plates snap onto DD96 display units; display units cannot be combined with each other by snap fit. DD96 rear mount units do not require end plate.

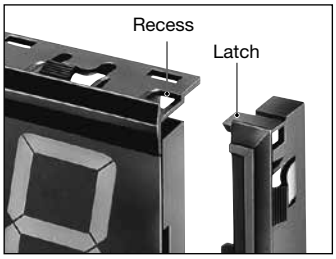

[Installing End Plates]
Press the end plate onto the side of the display unit.

[Removing End Plates]
Disengage the latches on top and bottom of the end plate using a screwdriver. Do not apply excessive force to the latches, or the latches may be damaged.

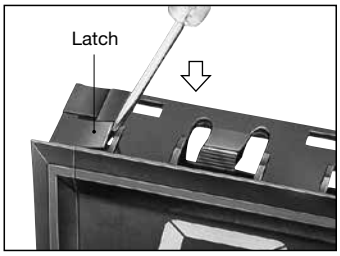

Panel Mounting

Install end plates onto display units at both ends and install the units into panel cut-out, then install display units in the middle.

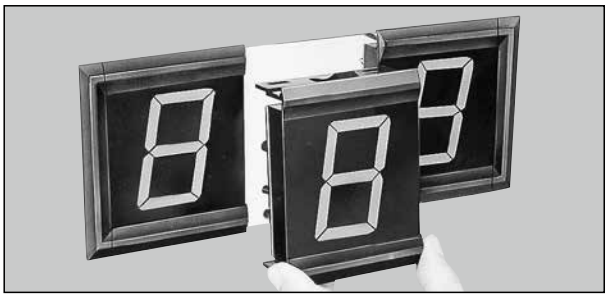

Latch Input

Latch Operation

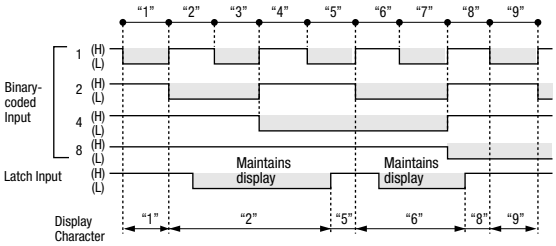

Latch Input Timing Chart

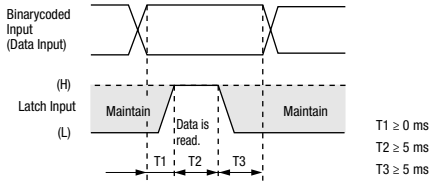

Note: If the data input is changed in the period of T2, the display will change.

Application of Latch Function

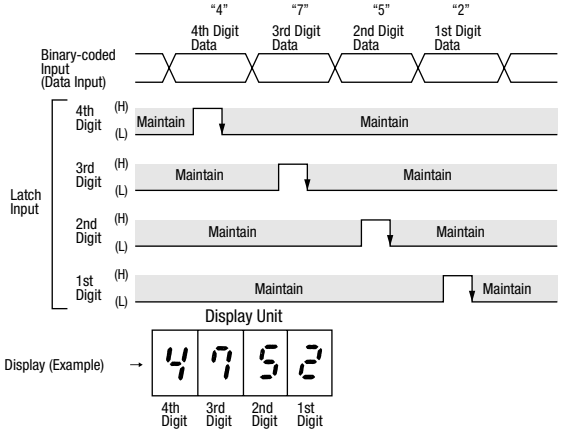

Block Diagram

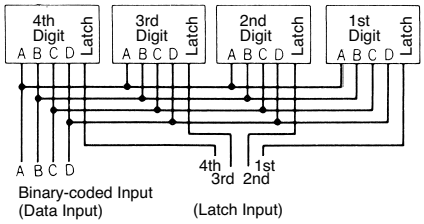

Connection to Terminals BI and BO

[Ex. 1]

By connecting as shown below, 0 is displayed when input is 0000 and 25 is displayed when input is 0025, eliminating unnecessary 0s in upper digits.

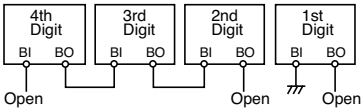

[Ex. 2]

By connecting as shown below, 0000 is displayed when input is 0000 and 0025 is displayed when input is 0025, with all 0s in upper digits displayed.

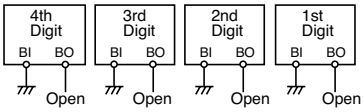

Notes:
1. Use BO output only for connection to BI input in the lower digit as shown in Ex. 1 above. Do not use the BO for other purposes.
2. When zero blanking is not required, maintain BI input in level L.

Instructions

1. A red filter is not provided for the front of the DD96 series rear mount display unit.
2. When cleaning the surface of the filter and housing, use a soft cloth. Do not use thinner or acid to clean the surface
3. When the display unit is mounted in a panel cut-out, do not place a metal object or power line within 40 mm from the end of the connector terminals at the rear of the display unit.
4. If the display unit is subjected to voltage surges, install a surge suppressor in the power line.
5. Use shielded cable or metal conduit for the input line. Run the input wiring as far away as possible from high-voltage and motor lines. Make the input line as short as possible.
6. When using display units in environments where a large amount of electrostatic noise is generated, such as where molding materials, powders, or fluids are transferred through pipe lines, keep the display units as far away as possible from electrostatic sources.
7. Avoid using the display unit in a place where excessive and frequent vibration or impact may occur.
8. Avoid using the display unit in a place where it is exposed to corrosive gas, water or oil splashes, dust or direct sunlight, or in a place where organic solvents are used.
9. The filter is made of polycarbonate. Make sure that machine oil does not touch the filter.
10. If the Latch input is on when the DD96 is powered up, the data input cannot be read correctly or wrong data may be maintained. Do not turn on the Latch input for 0.5 sec after the DD96 is powered up.
11. When the DD96 is powered up, an inrush current of 0.4A (10 ms maximum) flows through the internal power supply circuit. Select an external power supply of sufficient capacity, taking inrush current into consideration.
12. When connecting a pull-up or pull-down resistor to the input terminals, ensure compatibility with the input resistor in the DD96 internal circuit.

IDEC CORPORATION

www.idec.com

Head Office
6-64, Nishi-Miyahara-2-Chome, Yodogawa-ku, Osaka 532-0004, Japan

USA	IDEC Corporation	Tel: +1-408-747-0550	opencontact@idec.com	**Hong Kong**	IDEC Izumi (H.K.) Co., Ltd.	Tel: +852-2803-8989	info@hk.idec.com
Germany	APEM GmbH	Tel: +49-40-25 30 54 - 0	service@eu.idec.com	**China/Shanghai**	IDEC (Shanghai) Corporation	Tel: +86-21-6135-1515	idec@cn.idec.com
Singapore	IDEC Izumi Asia Pte. Ltd.	Tel: +65-6746-1155	info@sg.idec.com	**China/Shenzhen**	IDEC (Shenzhen) Corporation	Tel: +86-755-8356-2977	idec@cn.idec.com
Thailand	IDEC Asia (Thailand) Co., Ltd	Tel: +66-2-392-9765	sales@th.idec.com	**China/Beijing**	IDEC (Beijing) Corporation	Tel: +86-10-6581-6131	idec@cn.idec.com
Australia	IDEC Australia Pty. Ltd.	Tel: +61-3-8523-5900	sales@au.idec.com	**Japan**	IDEC Corporation	Tel: +81-6-6398-2527	marketing@idec.co.jp
Taiwan	IDEC Taiwan Corporation	Tel: +886-2-2698-3929	service@tw.idec.com				

Specifications and other descriptions in this brochure are subject to change without notice.
2018 IDEC Corporation, All Rights Reserved.

EP1606-3 OCTOBER 2018